ESTERO ON THE RIVER RESTROOM FACILITY

FOR THE VILLAGE OF ESTERO

9401 CORKSCREW PALMS CIRCLE
ESTERO, FLORIDA 33928

HARVARD JOLLY ARCHITECTURE

1639 HENDRY ST.
FORT MYERS, FLORIDA 33901
http://www.harvardjolly.com

STRUCTURAL ENGINEER:
SELECT STRUCTURAL

12573 NEW BRITTANY BLVD.
FORT MYERS, FLORIDA 33907
http://www.select-structural.com

MEP/FP/SYTEMS ENGINEER:
OCI ASSOCIATES, INC.

9728 Commerce Center Court
Fort Myers, Florida 33906
http://ociassociates.com

GENERAL NOTES

1. DIMENSIONS ON PLANS ARE TO COLUMN CENTERLINE, TO FINISH FACE OF INTERIOR METAL STUD PARTITIONS, TO FACE OF CONCRETE OR MASONRY WALLS, TO FINISH FACE OF EXTERIOR STUD WALLS AND TO FACE OF CORRIDOR SIDE FINISH OF CORRIDOR PARTITIONS UNLESS OTHERWISE NOTED.
2. ALL VERTICAL AND HORIZONTAL DUCTS, PIPES, CONDUITS, PANELS, ETC. (WHETHER SHOWN OR NOT) IN FINISHED ROOMS NOT ENCASED IN FINISHED WALLS OR CEILINGS SHALL BE FURRED-IN AND FINISHED TO MATCH ADJACENT SURFACES. SUCH FURRED SPACES SHALL EXTEND THE LENGTH OF THE WALL BETWEEN INTERSECTING WALLS UNLESS OTHERWISE INDICATED. WHERE FURRING A PORTION OF A WALL CONFLICTS WITH CASEWORK, THE FURRED LENGTH SHALL BE AS REQUIRED TO ALLOW FOR PROPER INSTALLATION. WHERE ACCESS IS REQUIRED FOR VALVES, DAMPERS OR OTHER DEVICES REQUIRING ADJUSTMENT, PROVIDE ACCESS PANELS PAINTED TO MATCH ADJACENT SURFACES. WHERE ENCLOSURE CONSTITUTES PART OF A FIRE RATED ASSEMBLY PROVIDE LABELED ACCESS DOOR.
3. WHERE DUCTS, PIPES, CONDUIT, BAR JOISTS, BEAMS OR ANY OTHER MATERIALS PENETRATE A FIRE RATED WALL OR PARTITION, OPENINGS SHALL BE TIGHTLY SEALED. ANNULAR OPENINGS IN CMU WALLS SHALL BE FILLED WITH GROUT. DO NOT COVER PENETRATIONS OF CMU WALLS WITH DRYWALL. PENETRATIONS IN METAL STUD PARTITIONS SHALL BE CONSTRUCTED WITH 25 GA. GALVANIZED RUNNER CHANNEL, SILL AND HEADER SECURED TO METAL STUDS, WITH THE SPACE AROUND THE PERIMETER OF THE PENETRATING OBJECT PACKED TIGHTLY WITH COMPRESSED MINERAL FIBER INSULATION. ALL PENETRATIONS IN GYPSUM WALLBOARD METAL STUD PARTITIONS SHALL BE SEALED WITH U.L. APPROVED FIRESTOP SYSTEM. ANNULAR OPENINGS GREATER AND 1/2" SHALL BE SEALED WITH TIGHT FITTING BLOWOUT PATCH CONSTRUCTED WITH EQUIVALENT LAYERS OF FIRE RESISTIVE GYPSUM WALLBOARD COVERING THE OPENING WITH A MINIMUM OVERLAP OF 4 INCHES, BUTTERED WITH JOINT COMPOUND AND FASTENED WITH TYPE G LAMINATING SCREWS. INSULATED PIPES SHALL BE SLEEVED WITH FOAMGLASS INSULATION. ANNULAR OPENING BETWEEN SLEEVE AND PIPE SHALL BE SEALED WITH APPROVED FIRE AND SMOKE RETARDANT SEALER. SLEEVES SHALL EXTEND A MAXIMUM OF 2" BEYOND FACES OF WALL. REFER TO PARTITION DETAILS AND MECHANICAL DRAWINGS.
4. WHERE A FIRE DAMPER IS REQUIRED THE SPACE BETWEEN THE SLEEVE AND THE STUDS AND HEADERS SHALL BE OF THE PROPER CLEARANCE FOR THE SIZE OF THE DUCT IN ACCORDANCE WITH SMACNA REQUIREMENTS. FIRE DAMPER SLEEVES SHALL BE INSTALLED AND SECURED IN ACCORDANCE WITH SMACNA STANDARDS. FIRE DAMPERS SHALL BE INSTALLED IN THE PLANE OF THE RATED ASSEMBLY.
5. LOW VOLTAGE WIRING WHICH PENETRATES A SMOKE OR FIRE/SMOKE WALL SHALL BE SLEEVED WITH CONDUIT EXTENDING NOT MORE THAN 2 INCHES EITHER SIDE OF THE WALL AND SECURELY ANCHORED TO PREVENT SLIPPING THROUGH THE WALL OR DAMAGING THE DRYWALL. REMAINING OPENINGS IN THE CONDUIT SLEEVE SHALL BE FILLED WITH TIGHTLY COMPRESSED MINERAL FIBER SAFING INSULATION AND SEALED WITH ACOUSTICAL SEALANT. IT IS THE RESPONSIBILITY OF EACH TRADE CONTRACTOR TO ASSURE COORDINATION OF INSTALLATION OF SUCH SYSTEMS BETWEEN VENDORS AND SUBCONTRACTORS. THE CONTRACTOR SHALL ASSURE THAT PENETRATIONS FOR UTILITIES ARE MADE WITH THE UTMOST CARE AND MINIMUM OF DAMAGE TO THE INTEGRITY OF ALL PARTITIONS AND WALLS. SLEEVES AND CONDUIT SHALL BE INSTALLED PRIOR TO RUNNING CABLES.
6. FURNISH ACCESS PANELS IN WALLS AND NON-ACCESSIBLE CEILINGS WHERE SERVICE OR ADJUSTMENT TO MECHANICAL, PLUMBING OR ELECTRICAL EQUIPMENT IS REQUIRED, AND AT INTERVALS NOT TO EXCEED 30 FEET IN NON-ACCESSIBLE CEILINGS OR FIRE MEMBRANES ADJACENT TO FIRE AND FIRE/SMOKE WALLS. WHERE ACCESS PANELS OCCUR IN RATED ASSEMBLIES THEY SHALL BEAR A LABEL RATING EQUAL TO THAT OF THE ASSEMBLY. ACCESS PANELS IN GYPSUM WALLBOARD MEMBRANES ABOVE NON-ACCESSIBLE CEILINGS SHALL BE ALIGNED TO PERMIT ACCESS AND SHALL BE SIZED TO PERMIT POSITIONING OF A STEP LADDER THROUGH THE ACCESS PANEL IN THE CEILING. RATED ACCESS PANELS IN CEILINGS AND MEMBRANES SHALL BE SUPPORTED FROM THE STRUCTURE, NOT THE CEILING FRAMING.
7. COORDINATE INSTALLATION OF PLUMBING, VENT STACKS AND CONDUIT TO PERMIT INSTALLATION OF RECESSED TOILET ACCESSORIES, FIRE EXTINGUISHER CABINETS AND OTHER RECESSED EQUIPMENT. WHERE SUCH ITEMS ARE RECESSED IN CORRIDOR, SMOKE OR FIRE/SMOKE WALLS THEY SHALL BE INSTALLED IN A FIVE-SIDE ENCLOSURE AS DESCRIBED IN NOTE 4 ABOVE.
8. ALL WOOD BLOCKING WITHIN THE BUILDING ENVELOPE SHALL BE FIRE RETARDANT TREATED. ISOLATE SALT TREATED WOOD FROM METAL FRAMING WITH 15# FELT AND USE CORROSION RESISTANT FASTENERS TO MINIMIZE GALVANIC CORROSION.
9. LAVATORIES AND SINKS SHALL BE INSTALLED A MINIMUM OF 4" FROM SIDE OF WALL. FAUCETS SHALL BE INSTALLED WITH A MINIMUM OF 5" FROM THE OUTLET TO THE FLOOD RIM OF SINKS. INCLUDING THOSE EQUIPPED WITH VACUUM BREAKERS. TOILETS SHALL BE SET 18" FOR HANDICAPPED FROM CENTERLINE TO FACE OF WALL OR LAVATORY. COORDINATE INSTALLATION OF SINKS, PLUMBING AND ELECTRICAL ITEMS IN AND ADJACENT TO CASEWORK. PROVIDE AT LEAST 24" CLEARANCE FOR ACCESS TO FOOT PEDAL VALVES AT CLINICAL SINKS.
10. THE TRADE CONTRACTOR SHALL VERIFY CONSTRUCTION IS COMPLETE AND IN ACCORDANCE WITH THE CONTRACT DOCUMENTS PRIOR TO INSPECTION BY THE AUTHORITY HAVING JURISDICTION.
11. IT IS THE INTENT OF THESE DRAWINGS TO PROVIDE SUBSTANTIAL, FIRE RESISTIVE INSTALLATIONS CONFORMING TO REQUIREMENTS OF THE INDICATED FIRE TEST AND RECOMMENDATIONS OF UNDERWRITER'S LABORATORES, THE GYPSUM ASSOCIATION AND WALLBOARD MANUFACTURER. INSTALLATIONS NOT CONFORMING TO THOSE STANDARDS SHALL BE CORRECTED AT NO ADDITIONAL COST TO THE OWNER.

UPDATING OF NOAs AND FLORIDA PRODUCT APPROVALS:

IN THE EVENT THAT SYSTEMS OR CONFIGURATIONS ARE REVISED AFTER ISSUANCE OF A JURISDICTIONAL-ISSUED PERMIT FOR THE WORK SHOWN AND NOTED HEREIN AND IN THE SPECIFICATIONS, THE CONTRACTOR PERFORMING THIS WORK SHALL BE REQUIRED TO UPDATE ALL AFFECTED JURISDICTIONAL AUTHORITIES AS REQUIRED BY THE JURISDICTIONAL AUTHORITY. THE EXTENT AND FORMAT OF THE UPDATE WILL BE DETERMINED BY MUTUAL AGREEMENT BETWEEN THE OWNER AND ARCHITECT. FBC 110.3.7.4.2

MAXIMUM LOADING: FBC 106.1

THE OWNER SHALL PROVIDE LIVE LOAD DURABLE NON-REMOVABLE SIGNAGE AT EACH AREA OR STORY DESIGNED TO EXCEED 50 PSF. SUCH SIGNAGE SHALL INDICATE THE ACTUAL LIVE LOAD DESIGN. REFER TO STRUCTURAL FOR APPLICABLE LIMITS.

WEATHER PROTECTION

MINIMUM THICKNESS OF WEATHER COATINGS SHALL BE PROVIDED UNLESS SPECIFIED THICKER PER FBC TABLE 1405.2

GEOTECHNICAL STATEMENT:

THE PROJECT SCOPE INCLUDES WORK REQUIRING A GEOTECHNICAL INVESTIGATION. THE REPORT #_____ DATED MM/DD/YY IS INCLUDED IN THE PROJECT SPECFICATIONS MANUAL (SEE APPENDICIES) OR BY REFERENCE IN THE EVENT SPECIFICATIONS ARE LISTED ON THE DRAWINGS.

TOP OF SLAB ELEVATION COORDINATION:

0.00 ON ARCHITECTURAL PLANS CORRESPONDS TO NGVD ELEVATION --.--.

FLOOD ZONE: [--]. FEMA MIN. TOP OF FLOOR/ SLAB LEVEL: [-- NGVD]. LOWEST STRUCTURAL MEMBER: [-- NGVD]

MATERIAL LEGEND

EARTH/FILL
BRICK
CONCRETE
STUCCO, CEMENT PLASTER, LIGHTWEIGHT CONCRETE
CMU - LARGE SCALE
CMU - SMALL SCALE
CERAMIC TILE
METAL - LARGE SCALE
METAL - SMALL SCALE OR SHEET METAL
FINISH WOOD
WOOD BLOCKING
WOOD SHIM
PLYWOOD
GYPSUM WALLBOARD
RIGID INSULATION
BATT INSULATION
SAFING INSULATION
PREMOLDED JOINT FILLER
JOINT SEALANT AND BACKER ROD

SYMBOLS LEGEND

COLUMN AND CONSTRUCTION GRID LINES
BLDG/FLOOR/DEPT. NUMBER
ROOM NUMBER
ROOM NAME
ROOM AREA
ROOM TAG (01-204A MATERIAL STORAGE; 988 SF; 300 | 3)
OCCUPANT LOAD (LIFE SAFETY ONLY)
OCCUPANT LOAD FACTOR (LIFE SAFETY ONLY)
DOOR SYMBOL (999B.62)
WINDOWS, CURTAIN WALL, & STORE FRONTS
LOUVER
CABINET TAG (B 24 A 36)
CABINET TYPE
TYPE VERSION(Project Specific)
CABINET HEIGHT
CABINET WIDTH
CABINET TYPES: B: BASE; F: FULL; W: WALL
TYPE VERSION(Examples): A: FULL DOOR; B: DOUBLE DOOR; C: RIGHT DOOR; D: LEFT DOOR
CEILING DESCRIPTION (10'-0" CP-1)
EQUIPMENT DESCRIPTION (XXX)
TOILET ACCESSORY DESCRIPTION
SIGNAGE DESCRIPTION (XXX)
DRAWING NOTE
SECTION NUMBER (SIM, A-311)
CUTTING LINE
SHEET WHERE LOCATED
ELEVATION LETTER
EXTERIOR/INTERIOR ELEVATION SYMBOL (A-211)
SHEET WHERE LOCATED
DETAIL INDICATION SYMBOL (A-501)
REVISION (AREA/ITEM REVISED)
FLOOR/DATUM ELEVATION LEVEL (100'-0" FIRST FLOOR)
MATCH LINE

& AND
< ANGLE
NUMBER OR POUND
@ AT
℄ CENTERLINE
Ø DIAMETER OR ROUND

ABBREVIATIONS

A	
A.B.	ANCHOR BOLT
A/C	AIR CONDITION(ING)
ACOUS.	ACOUSTICAL)
ADJ.	ADJUSTABLE, ADJACENT
A.D.O.	AUTOMATIC DOOR OPENER
A.F.F.	ABOVE FINISH FLOOR
A.H.U.	AIR HANDLER (UNIT) UNIT
AL	ALUMINUM
A.L.	ACOUSTICAL LAY-IN
ALT.	ALTERNATE
ANOD.	ANODIZED
A.P.	ACCESS PANEL
APPROX.	APPROXIMATE
ARCH.	ARCHITECT
AUTO.	AUTOMATIC
B.G.	BUMPER GUARD
BLDG.	BUILDING
BM	BEAM
BOT.	BOTTOM
B.U.R.	BUILT-UP ROOFING
CAB.	CABINET
C.B.	CATCH BASIN
C.C.T.	CUBICAL CURTAIN TRACK
C.C.U.	CORONARY CARE UNIT
CER.	CERAMIC
C.F.C.I.	CONTRACTOR FURNISHED CONTRACTOR INSTALLED
C.G.	CORNER GUARD
C.I.	CAST IRON
C.J.	CONTROL JOINT
C.L.	CENTER LINE
CLG.	CEILING
CLO.	CLOSET
CLR.	CLEAR
C.M.U.	CONCRETE MASONRY UNIT
COL.	COLUMN
COM.	COMMON
CONC.	CONCRETE
CONST.	CONSTRUCTION
CONT.	CONTINUOUS
CONTR.	CONTRACTOR
CORR.	CORRIDOR
C.O.	CASED OPENING
CP.	CARPET
C.S.	CONCRETE SEALED
C.S.W.	CAVITY SHAFT WALL
C.T.	CERAMIC TILE
CTR.	COUNTER, CENTER
C.T.S.	COMPUTED AXIAL TOMOGRAPHY SCANNER
CTSK.	COUNTER SUNK
C.T.W.	CERAMIC TILE WAINSCOAT
C.U.	CLEAN UTILITY
D	
D.A.	DELAYED ACTION
DBL.	DOUBLE
D.E.	DOUBLE EGRESS
DEPT.	DEPARTMENT
DET.	DETAIL
D.F.	DRINKING FOUNTAIN
DIA.	DIAMETER
DIAG.	DIAGONAL
DIM.	DIMENSION
DISP.	DISPENSER
DN.	DOWN
D.R.	DRESSING ROOM
DR.	DOOR, DOCTOR
DWGS.	DRAWINGS
DWR.	DRAWER
E	
EA.	EACH
E.B.	EXPANSION BOLT
E.J.	EXPANSION JOINT
EL.	ELEVATION
ELEC.	ELECTRICAL
ELEV.	ELEVATOR
EMER.	EMERGENCY
E.P.	ELECTRICAL PANELBOARD
EQ.	EQUAL
EQUIP.	EQUIPMENT
E.R.	EMERGENCY ROOM, EMERGENCY RELEASE
E.S.	EXPOSED STRUCTURE
E.T.	ELAPSED TIME
E.Q.C.	ELECTRIC WATER COOLER
EXP.	EXPANSION
EXIST.	EXISTING
EXT.	EXTERIOR
F	
F.A.	FIRE ALARM
F.A.C.	FIRE ALARM CABINET
F.A.P.	FIRE ALARM PULL STATION
F.C.	FURRING CHANNEL
F.D.	FLOOR DRAIN, FIELD DIMENSION
FDN.	FOUNDATION
F.E.	FIRE EXTINGUISHER
F.E.C.	FIRE EXTINGUISHER CABINET
F.F.E.	FINISHED FLOOR ELEVATION
F.H.C.	FIRE HOSE CABINET
F.I.	FILM ILLUMINATOR
FIN.	FINISH
FL.	FLOOR
FLASH.	FLASHING
FLOUR.	FLOURESCENT
F.N.D.	FEMININE NAPKIN DISPOSAL
F.N.V.	FEMININE NAPKIN VENDOR
FPRF.	FIRE PROOF(ING)
F.R.	FIRE RATED
FR.	FRAME
FT.	FOOT OR FEET
FTG.	FOOTING
FURR.	FURRING
FUT.	FUTURE
F.W.	FLUSH WOOD
G	
GA.	GAUGE
GAL.	GALLON
GALV.	GALVANIZED
G.B.	GRAB BAR
G.C.	GENERAL CONTRACTOR
G.M.	GALVANIZED METAL
G.M.L.	GALVANIZED METAL LATH
G.M.S.	GALVANIZED METAL STUD
GND.	GROUND
GR.	GRADE
GYP.	GYPSUM
GWB	GYPSUM WALLBOARD
H	
H.B.	HOSE BIB
HBD.	HARDBOARD
H.C.	HOLLOW CORE, HANDICAPPED HARDWARE
HDW.	HARDWOOD
HDWD.	HEIGHT
HGT.	HOLLOW METAL
H.M.	HORIZONTAL
HORIZ.	HIGH POINT
H.PT.	HOUR
HR.	HANDRAIL
H.R.	HEALTH AND REHABILITATIVE SERVICES
H.R.S.	HEAT STRENGTHENED
H.S.	HEAT SEAMED VINYL
H.S.V.	HEATING
HTG.	HEATING, VENTILATION, & AIR CONDITIONING
H.V.A.C.	
I	
I.C.U.	INTENSIVE CARE UNIT
I.D.	INSIDE DIAMETER
IN.	INCH(ES)
INCL.	INCLUDE(D)(ING)
INSUL.	INSULATION
INT.	INTERIOR
INV.	INVERT(ED)
I.P.	ISOLATION PANEL
I.P.S.	INSIDE PIPE DIAMETER
I.T.	ISOLATION TRANSFORMER
I.V.T.	INTRAVENOUS TRACK
J	
JAN.	JANITOR
JT.	JOINT
K	
K.P.	KICK PLATE
K.S.	KNEE SPACE
L	
L.	LENGTH
LAB.	LABORATORY
L.A.	LAY-IN ACOUSTICAL
LAM.	LAMINATE
LAV.	LAVATORY
LBL.	LABEL
L.F.	LINEAR FEET
LKR.	LOCKER
L.L.	LEAD LINED, LIVE LOAD
L.P.	LIGHTPROOF
LT.WT.	LIGHT WEIGHT
M	
MAS.	MASONRY
MATL.	MATERIAL
MAX.	MAXIMUM
M.B.	MACHINE BOLT
MECH.	MECHANICAL
MED.	MEDICINE CABINET
MED. PREP.	MEDICAL PREPARATION
MET.	METAL
MFD.	MANUFACTURED
MFR.	MANUFACTURER
M.G.	MEDICAL GAS
M.G.A.	MEDICAL GAS ALARM
M.G.I.	MEDICAL GAS OUTLET
M.G.V.B.	MEDICAL GAS VALVE BOX
M.H.	MANHOLE
MIN.	MINIMUM
MISC.	MISCELLANEOUS
MLDG.	MOULDING
M.O.	MASONRY OPENING
M.O.L.	MORE OR LESS
M.P.	MEDICINE PREPARATION
M.R.	MOISTURE RESISTANT
M.R.I.	MAGNETIC RESONANCE IMAGER
M.S.	METAL STUD
M.S.L.	MEAN SEA LEVEL
M.T.	METAL THRESHOLD
MTD.	MOUNTED
MUL.	MULLION
M.V.	MIXING VALVE
N	
N.C.	NURSE CALL
N.I.C.	NOT IN CONTRACT
NO.	NUMBER
NOM.	NOMINAL
N.STA.	NURSE STATION
N.T.S.	NOT TO SCALE
O	
O.A.	OVERALL
O.C.	ON CENTER
O.D.	OUTSIDE DIAMETER, OVERALL DIMENSION
O.F.C.O.	OWNER FURNISHED CONTRACTOR INSTALLED
O.F.O.I	OWNER FURNISHED OWNER INSTALLED
O.H.	OVERHEAD, OPPOSITE
O.H. CAB.	OVERHEAD CABINET
OPNG.	OPENING
OPP.	OPPOSITE
O.S.	OVERFLOW SCUPPER
O.R.	OPERATING ROOM
P	
P.	PAINT
PF.	PREFABRICATED
PL.	PLATE, PLASTIC LAMINATE
PLAS.	PLASTER
PLBG.	PLUMBING
PLYWD.	PLYWOOD
POL.	POLISHED
PR.	PAIR
PT.	POINT
P.T.	PRESSURE TREATED
P.T.D.	PAPER TOWEL DISPENSER
PTN.	PARTITION
P.V.C.	POLYVINYL CHLORIDE
Q	
Q.T.	QUARRY TILE
R	
R.	RISER OR RADIUS
R.C.	RUNNER CHANNEL
R.C.P.	REINFORCED CONCRETE PIPE
R.D.	ROOF DRAIN
RE.	RELATIVE TO
RECEP.	RECEPTACLE
REF.	REFERENCE
REFR.	REFRIGERATOR
REG.	REGLET, REGULAR
REINF.	REINFORCING
REQD.	REQUIRED
REV.	REVISION
R.H.	ROBE HOOK
RM.	ROOM
R.O.	ROUGH OPENING
S	
S.A.B.	SOUND ATTENUATING BLANKET
S.C.	SOLID CORE
SCHED.	SCHEDULE
S.A.	SOAP DISPENSER
SEAL.	SEALANT
SECT.	SECTION
S.F., SQ. FT.	SQUARE FOOT (FEET)
SH.	SHELVING, SHELF
SHT.	SHEET
SIM.	SIMILAR
S.M.	SHEET METAL
S.M.S.	SHEET METAL SCREW
S.P.B.	SPECIMEN PASS BOX
SPEC.	SPECIFICATION(S)
SPF.	SOUNDPROOF
S.S.	STAINLESS STEEL
STA.	STATION
STD.	STANDARD
STL.	STEEL
STOR.	STORAGE
STRL.	STRUCTURAL
S.U.	SOILED UTILITY
SUSP.	SUSPENDED
S.Y.	SQUARE YARD
T	
T.	TREAD, TOILET
TA.	TABLE
T.B.	TEST BORING
T.C.	TOILET COMPARTMENT
TEL.	TELEPHONE
TEMP.	TEMPERED, TEMPERATURE
T.&G.	TONGUE & GROOVE
THK.	THICK(NESS)
T.P.D.	TOILET PAPER DISPENSER
T.P.H.	TOILET PAPER HOLDER
TREAT.	TREATMENT
T.V.	TELEVISION
TYP.	TYPICAL
U	
UC.	UNDERCUT
U.C.	UNDERCOUNTER
U.O.N.	UNLESS OTHERWISE NOTED
UTIL.	UTILITY
V	
V.	VINYL
V.B.	VINYL BASE
V.C.T.	VINYL COMPOSITION TILE
VERT.	VERTICAL(LY)
VEST.	VESTIBULE
V.I.F.	VERIFY IN FIELD
V.W.C.	VINYL WALL COVERING
W	
W/	WITH
W.B.	WALL BUMPER
W.C.	WATER CLOSET, WALL COVERING
W/C	WHEEL CHAIR
WD.	WOOD
W.H.	WATER HEATER
W.I.	WROUGHT IRON
W/O	WITHOUT
W.O.	WHERE OCCURS
W.P.	WATERPROOF(ING)
W.R.	WASTE RECEPTACLE
WT.	WEIGHT
W.W.F.	WELDED WIRE FABRIC
W.W.M.	WELDED WIRE MESH
Y	
YD.	YARD

DRAWING INDEX

LOCATION MAP

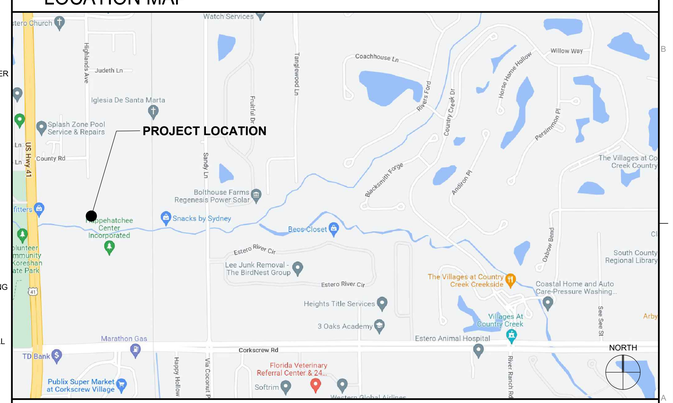

SHEET NO. SYSTEM

DISCIPLINE PACKAGE
A-101A — AREA OF BUILDING
CATEGORY
FLOOR OF BUILDING

HARVARD ● JOLLY
ARCHITECTURE
1639 Hendry St. Fort Myers Florida 33901 | 727-896-4611 | www.HarvardJolly.com | AAC000119

ESTERO ON THE RIVER RESTROOM FACILITY
ESTERO, FLORIDA
CONSTRUCTION DOCUMENTS

Comm. No: 22031.01
Date: 09/08/2023
Drawn: BKL

Revisions

No.	Date	Note

TO THE BEST OF MY KNOWLEDGE, THE PLANS AND SPECIFICATIONS COMPLY WITH THE MINIMUM BUILDING CODES.

Architect of Record
Licence #

GENERAL NOTES LEGENDS & ABBREVIATIONS

G-010

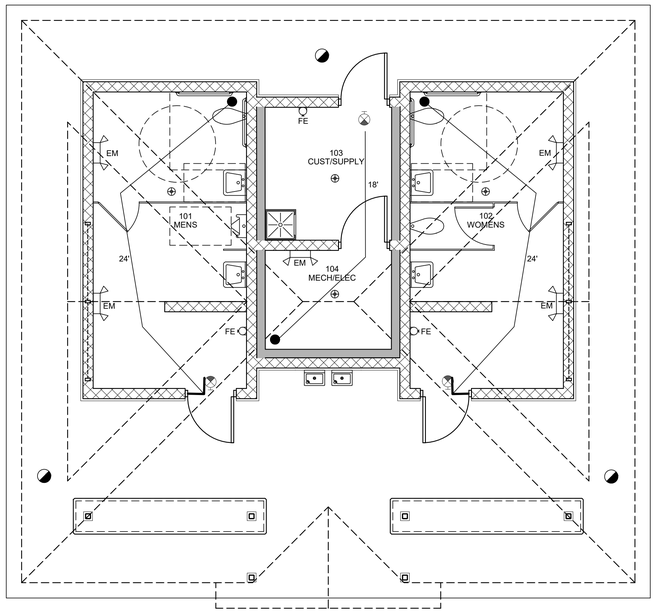

1 LIFE SAFETY PLAN
SCALE: 1/4" = 1'-0"

LIFE SAFETY PLAN LEGEND

- 150' — GRAPHIC ILLUSTRATION OF TRAVEL DISTANCE TO EXIT FROM REMOTE POINT
- LIGHTED EXIT SIGN
- EM — EMERGENCY LIGHT WITH BATTERY BACK UP
- SD — SMOKE DETECTOR
- FE — FIRE EXTINGUISHER
- CAN LIGHT WITH BATTERY BACK UP

1. SEE ELECTRICAL SYSTEMS DRAWINGS FOR ADDITIONAL LIFE SAFETY DEVICES NOT SHOWN ON THIS DRAWING.
2. ALL DOORS ON THIS PROJECT HAVE A 34" CLEAR EXIT WIDTH AND HAVE AN EGRESS CAPACITY FOR 170 PERSONS MINIMUM.

CODE INFORMATION

APPLICABLE CODES

BUILDING CODE:	FLORIDA BUILDING CODE (FBC) 7TH EDITION (2020) WITH APPLICABLE AMENDMENTS
MECHANICAL CODE:	FBC MECHANICAL 7TH EDITION (2020) WITH APPLICABLE AMENDMENTS
ELECTRICAL CODE:	FBC - CHAPTER 27; NFPA 70-17 NATIONAL ELECTRIC CODE (N.E.C.) WITH APPLICABLE AMENDMENTS
PLUMBING CODE:	FBC PLUMBING 7TH EDITION (2020) WITH APPLICABLE AMENDMENTS
GAS FUEL CODE:	FBC FUEL GAS 7TH EDITION (2020) WITH APPLICABLE AMENDMENTS
FIRE SAFETY CODE:	FLORIDA FIRE PREVENTION CODE 7TH EDITION (FFPC) NFPA 1 2018 AND NFPA 101 2018) WITH APPLICABLE AMENDMENTS
ACCESSIBILITY CODE:	FBC FLORIDA ACCESSIBILITY CODE FOR BUILDING CONSTRUCTION 7TH EDITION (2020)

BUILDING CATEGORIZATION & PHYSICAL PROPERTIES

CH. 3:USE AND OCCUPANCY CLASSIFICATION CH.4: SPECIAL DETAILED REQUIREMENTS BASED ON USE AND OCCUPANCY - SREF CH. 5: OCCUPANCY GROUP AND SPECIAL OCCUPANCY REQUIREMENTS	FLORIDA BUILDING CODE 7TH EDITION (2020)	FLORIDA FIRE PREVENTION CODE 7TH EDITION NFPA 101
	CHAPTER 3, SECTION 302 CHAPTER 4, SECTION 453 CHAPTER 5, SECTION 508	CHAPTER 6, SECTION 6.1.1
	OCCUPANCY AND USE DESIGNATION: UTILITY, GROUP U	OCCUPANCY CLASSIFICATION: UTILITY
CONSTRUCTION TYPE CHAPTER 5 TABLES 504.3, 504.4, 506.2	CHAPTER 6	CHAPTER 8 8.2.1.1 and 8.2.1.2 TABLE A.8.2.1.2
	TYPE 11B	TYPE 11 (000)

OCCUPANCY LOAD / EGRESS REQUIREMENTS - FBC CHAPTER 10, FFPC CHAPTER 7

OCCUPANT LOAD : GROSS / NET	300
MEANS OF EGRESS	REFER TO LIFE SAFETY PLANS
EXIT ACCESS / EXIT / EXIT DISCHARGE	REFER TO LIFE SAFETY PLANS
STAIRS CONSTRUCTION / GEOMETRY AND PROTECTION	N/A
DOORS	REFER TO LIFE SAFETY PLANS
EMERGENCY LIGHTING AND EXIT SIGNS	REFER TO LIFE SAFETY PLANS, ELECTRICAL LIGHTING AND SYSTEMS DRAWINGS AND SPECS.
SPECIFIC OCCUPANCY REQUIREMENTS	N/A
CONSTRUCTION REQUIREMENTS	REFER TO CODE ANALYSIS
HORIZONTAL EXITS / EXIT PASSAGEWAYS	REFER TO LIFE SAFETY PLANS

FIRE EXTINGUISHER REQUIREMENTS

FIRE EXTINGUISHER COMPONENT FOR ORDINARY (MODERATE) HAZARD OCCUPANCY	FLORIDA BUILDING CODE 7TH EDITION (2020) FBC 906.1 TABLE 906.3(1) CLASS A FIRE HAZARDS	FLORIDA FIRE PREVENTION CODE 7TH EDITION NFPA 101: 9.9	PROVIDED
		NFPA 1: 13.6.2 AND TABLE 13.6.3.2.1.1 FOR CLASS A HAZARDS	
MINIMUM RATED SINGLE EXTINGUISHER	2A	2A	1
MAXIMUM FLOOR AREA PER UNIT OF A	1,500 SQ FT	1,500 SQ FT	634 S.F.
MAXIMUM FLOOR AREA PER EXTINGUISHER TYPE 2A	3,000 SQ FT	3,000 SQ FT	634 S.F.
MAXIMUM TRAVEL DISTANCE - CLASS A	75 FEET	75 FEET	24 FEET
MAXIMUM FLOOR AREA PER EXTINGUSHER	11,200 S.F.	11,200 S.F.	634 S.F.

HARVARD ● JOLLY
ARCHITECTURE
1639 Hendry St. Fort Myers Florida 33901 | 727-896-4611 | www.HarvardJolly.com | AAC000119

ESTERO ON THE RIVER
RESTROOM FACILITY
ESTERO, FLORIDA
CONSTRUCTION DOCUMENTS

Comm. No: 22031.01
Date: 09/08/2023
Drawn: BKL

Revisions		
No.	Date	Note

TO THE BEST OF MY KNOWLEDGE, THE PLANS AND SPECIFICATIONS COMPLY WITH THE MINIMUM BUILDING CODES.

Architect of Record
Licence #

LIFE SAFTEY PLAN & CODE INFORMATION

G-011

GENERAL STRUCTURAL NOTES

GENERAL: DETAILS AND SECTIONS SHOWN ON THE DRAWINGS ARE TYPICAL AND APPLY TO SIMILAR SITUATIONS ELSEWHERE, EXCEPT AS OTHERWISE INDICATED. ADAPT REQUIREMENTS OF DETAILS, SECTIONS, PLANS, AND NOTES AT LOCATIONS WHERE CONDITIONS ARE SIMILAR.

CENTER ALL FOOTINGS AND PIERS UNDER COLUMNS ABOVE UNLESS SPECIFICALLY DIMENSIONED OTHERWISE.

STRUCTURAL DRAWINGS SHALL BE USED IN CONJUNCTION WITH JOB SPECIFICATIONS AND ARCHITECTURAL, MECHANICAL, ELECTRICAL, PLUMBING, AND SITE DRAWINGS. CONSULT THESE DRAWINGS FOR SLEEVES, DEPRESSIONS, AND OTHER DETAILS NOT SHOWN ON STRUCTURAL DRAWINGS.

CONTRACTOR SHALL LOCATE ALL BURIED UTILITIES PRIOR TO EXCAVATION FOR BUILDING FOUNDATIONS. THE STRUCTURAL ENGINEER SHALL BE NOTIFIED OF POTENTIAL CONFLICTS BETWEEN FOUNDATIONS AND BURIED UTILITIES.

CODE REQUIREMENTS: THE BUILDING STRUCTURE IS DESIGNED IN ACCORDANCE WITH THE 2020 7TH EDITION OF THE FLORIDA BUILDING CODE. FOLLOW ALL APPLICABLE PROVISIONS FOR ALL PHASES OF CONSTRUCTION. ADDITIONS ARE IN COMPLIANCE WITH THE 2020 EDITION OF THE FLORIDA EXISTING BUILDING CODE.

DESIGN CRITERIA: DESIGN WAS BASED ON STRENGTH AND DEFLECTION CRITERIA OF THE 2020 FLORIDA BUILDING CODE. THE FOLLOWING LOADS WERE USED FOR DESIGN, WITH LIVE LOADS REDUCED PER THE 2020 FBC.

SUPERIMPOSED DEAD LOADS:
ROOF 20 PSF 300 POUND CONCENTRATED

INCLUDES AN ALLOWANCE OF 5 PSF AND A 250 LB POINT LOAD FOR WATER FILLED SPRINKLER PIPING.

ROOF LIVE: 20 PSF

RAIN LOAD:
RAINFALL INTENSITY 5.0 IN/HR

WIND SPEED (ASCE 7-16) 160 MPH (124 MPH ALLOWABLE)
RISK CATEGORY II
EXPOSURE C
INTERNAL PRESSURE COEFF +/- 0.18 ENCLOSED
WALL PRESSURE +/- 53 PSF

FOUNDATIONS: FOUNDATION DESIGN IS BASED ON AN ASSUMED ALLOWABLE SOIL BEARING PRESSURE OF 2000 PSF FOR SILTY SAND AND GRAVELS. FOUNDATIONS SHALL BEAR ON COMPETENT NATIVE SOIL OR COMPACTED STRUCTURAL FILL. IF QUESTIONABLE SOILS OR POTENTIALLY UNSTABLE CONDITIONS ARE ENCOUNTERED, A GEOTECHNICAL ENGINEER SHALL BE RETAINED TO INVESTIGATE AND PROVIDE RECOMMENDATIONS.

SUBMITTALS: SHOP DRAWINGS SHALL BE SUBMITTED TO THE ARCHITECT PRIOR TO FABRICATION AND CONSTRUCTION REGARDING ALL STRUCTURAL ITEMS INCLUDING THE FOLLOWING:

CONCRETE MIX DESIGNS,
CONCRETE AND MASONRY REINFORCING,
EMBEDDED STEEL ITEMS,
STRUCTURAL STEEL,

SHOP DRAWINGS SHALL BE REVIEWED BY THE CONTRACTOR PRIOR TO SUBMITTAL TO THE ARCHITECT/ENGINEER. DRAWINGS SUBMITTED WITHOUT REVIEW WILL BE RETURNED UNCHECKED.

IF THE SHOP DRAWINGS DIFFER FROM OR ADD TO THE DESIGN OF THE STRUCTURAL DRAWINGS, THEY SHALL BEAR THE SEAL AND SIGNATURE OF A STRUCTURAL ENGINEER REGISTERED IN THE STATE OF THE PROJECT LOCATION. ANY CHANGES TO THE STRUCTURAL DRAWINGS SHALL BE SUBMITTED TO THE ARCHITECT AND ARE SUBJECT TO THE REVIEW AND ACCEPTANCE OF THE ENGINEER.

DESIGN DRAWINGS, SHOP DRAWINGS, AND CALCULATIONS FOR THE DESIGN AND FABRICATION OF ITEMS THAT ARE DESIGNED BY OTHERS, INCLUDING:

STRUCTURAL STEEL CONNECTIONS,
PREMANUFACTURED WOOD TRUSSES,
PREMANUFACTURED METAL TRUSSES,

SHALL BEAR THE SEAL AND SIGNATURE OF A STRUCTURAL ENGINEER REGISTERED IN THE STATE OF THE PROJECT LOCATION AND SHALL BE SUBMITTED TO THE ARCHITECT PRIOR TO FABRICATION. CALCULATIONS SHALL BE INCLUDED FOR ALL CONNECTIONS TO THE STRUCTURE, CONSIDERING LOCALIZED EFFECTS ON THE STRUCTURAL ELEMENTS INDUCED BY THE CONNECTION LOADS. DESIGN SHALL BE BASED ON THE REQUIREMENTS OF THE 2020 FBC.

SHOP DRAWINGS WILL BE REVIEWED FOR GENERAL COMPLIANCE WITH THE DESIGN INTENT OF THE CONTRACT DOCUMENTS ONLY. IT SHALL BE THE RESPONSIBILITY OF THE CONTRACTOR TO VERIFY COMPLIANCE WITH THE CONTRACT DOCUMENTS AS TO QUANTITY, LENGTH, ELEVATIONS, DIMENSIONS, ETC. CONTRACTOR SHALL NOT BE RELIEVED FROM RESPONSIBILITY FOR ERRORS OR OMISSIONS IN SHOP DRAWINGS OR MIX DESIGNS BY THE ENGINEER'S REVIEW.

DEFERRED SUBMITTALS: IN ACCORDANCE WITH FBC 107.3.4.1, THE FOLLOWING SPECIALITY ITEMS FOR PORTIONS OF THE BUILDING WILL NOT BE SUBMITTED AT THE TIME OF BUILDING PERMIT APPLICATION BUT WILL BE DEFERRED UNTIL AFTER THE PERMIT HAS BEEN ISSUED.
PREMANUFACTURED WOOD TRUSSES,
PREMANUFACTURED METAL TRUSSES,
THESE ELEMENTS ARE PERFORMANCE-BASED DESIGN. THE CONTRACTOR SHALL CONTRACT FOR THE DESIGN AND CONSTRUCTION OF THESE ELEMENTS DURING THE CONSTRUCTION PHASE. THE SHOP DRAWINGS AND CALCULATIONS SHALL BE PREPARED AND SIGNED BY A STRUCTURAL ENGINEER REGISTERED IN THE STATE OF THE PROJECT LOCATION. THEY SHALL BE SUBMITTED FOR REVIEW AND APPROVAL PRIOR TO FABRICATION.
THE DEFERRED SUBMITTAL ITEMS SHALL NOT BE INSTALLED UNTIL THE DEFERRED SUBMITTAL DOCUMENTS HAVE BEEN APPROVED BY THE BUILDING OFFICIAL.
CONCRETE: REINFORCED CONCRETE CONSTRUCTION SHALL CONFORM TO THE FBC AND ACI 318 "BUILDING CODE REQUIREMENTS FOR REINFORCED CONCRETE". CONCRETE STRENGTHS SHALL BE VERIFIED BY STANDARD 28-DAY CYLINDER TESTS PER ASTM C39, AND SHALL BE AS FOLLOWS:

f'c	USE
3000 PSI	FOUNDATIONS/SLAB ON GRADE
4000 PSI	ALL USES, U.N.O.

CEMENT SHALL CONFORM TO ASTM C150, TYPE 1. FLY ASH CONFORMING TO ASTM C618, TYPE F OR TYPE C, MAY BE USED TO REPLACE UP TO 20% OF THE CEMENT CONTENT, PROVIDED THAT THE MIX STRENGTH IS SUBSTANTIATED BY TEST DATA. COARSE AGGREGATE SHALL CONFORM TO ASTM C33 WITH A MAXIMUM SIZE OF 3/4". FINE AGGREGATE SHALL BE CLEAN, DURABLE, NATURAL SAND CONFORMING TO ASTM C33.

A WATER-REDUCING ADMIXTURE, IF USED, SHALL CONFORM TO ASTM C494 AND USED IN STRICT ACCORDANCE WITH THE MANUFACTURER'S RECOMMENDATIONS, SHALL BE INCORPORATED IN CONCRETE DESIGN MIXES. A HIGH-RANGE WATER-REDUCING ADMIXTURE CONFORMING TO ASTM C494, TYPE F OR G, MAY BE USED IN CONCRETE MIXES, PROVIDING THAT THE SLUMP DOES NOT EXCEED 8".

SLEEVES, OPENINGS, CONDUIT, AND OTHER EMBEDDED ITEMS NOT SHOWN ON THE STRUCTURAL DRAWINGS SHALL BE APPROVED BY THE STRUCTURAL ENGINEER BEFORE POURING. NO SLEEVE, OPENING, OR INSERT MAY BE PLACED IN BEAMS, JOISTS, OR COLUMNS UNLESS APPROVED BY THE ENGINEER. CONDUITS EMBEDDED IN SLABS SHALL NOT BE LARGER IN OUTSIDE DIMENSION THAN ONE THIRD OF THE THICKNESS OF THE SLAB AND SHALL NOT BE SPACED CLOSER THAN THREE DIAMETERS ON CENTER.

PROVIDE 3/4" CHAMFERS ON ALL EXPOSED CONCRETE EDGES, UNLESS NOTED OTHERWISE. WHERE INDICATED OR REQUIRED, SLOPE CONCRETE SLABS TO DRAINS SHOWN ON PLUMBING AND/OR ARCHITECTURAL DRAWINGS.

ALL CONCRETE SHALL BE CURED IMMEDIATELY AFTER FINISHING OPERATIONS.

REINFORCING STEEL: REINFORCING STEEL SHALL CONFORM TO ASTM A615, GRADE 60, FOR DEFORMED BAR AND ASTM A1064 FOR SMOOTH WELDED WIRE FABRIC (WWF), UNLESS OTHERWISE NOTED. REINFORCING STEEL TO BE WELDED SHALL CONFORM TO ASTM A706. REINFORCING STEEL SHALL BE SECURELY TIED IN PLACE WITH #16 ANNEALED IRON WIRE.

ALL DETAILING AND ACCESSORIES SHALL CONFORM TO ACI DETAILING MANUAL SP-66. PROVIDE CHAIRS, SPACERS, BOLSTERS, AND ITEMS IN CONTACT WITH FORMS WITH HOT-DIP GALVANIZED LEGS OR PLASTIC LEGS. ACCURATELY POSITION, SUPPORT, AND SECURE REINFORCEMENT AGAINST DISPLACEMENT BY FORMWORK CONSTRUCTION OR CONCRETE PLACEMENT OPERATIONS. "WET-STICKING" OF REINFORCING IS PROHIBITED.

REQUIRED CONCRETE COVER FOR REINFORCING STEEL (UNLESS NOTED OTHERWISE):

FOOTINGS 3" BOTTOM AND SIDES, 2" TOP
BEAMS 1-1/2" TO STIRRUPS

LAP SPLICE CONTINUOUS VERTICAL OR HORIZONTAL BARS IN CONCRETE MEMBERS IN ACCORDANCE WITH ACI 318-14, FOR CLASS "B" TENSION LAP SPLICES. DO NOT SPLICE CONTINUOUS TOP BARS IN BEAMS AT ENDS OF CLEAR SPANS. DO NOT SPLICE CONTINUOUS BOTTOM BARS IN BEAMS IN CLEAR SPANS BETWEEN SUPPORTS. SHOW ALL SPLICES ON SHOP DRAWINGS. SPLICE LOCATIONS AND METHODS SUBJECT TO APPROVAL OF STRUCTURAL ENGINEER.

AT SLAB RE-ENTRANT CORNERS, PROVIDE (2) #5 X 4'-0" DIAGONAL BARS. AT SLAB AND WALL OPENINGS PROVIDE A MINIMUM OF (2) #5 BARS ALL FOUR SIDES AND DIAGONALLY; EXTEND THESE BARS A LAP DISTANCE OR A MINIMUM OF 24" PAST THE OPENING OR HOOK BARS IF DISCONTINUOUS.

DOWEL ALL WALLS AND COLUMNS TO FOOTINGS WITH BAR SIZE AND SPACING TO MATCH VERTICAL REINFORCING UNLESS OTHERWISE SHOWN.

SLABS ON GRADE: PREPARE SUBGRADE AS PER THE RECOMMENDATIONS OUTLINED IN THE GEOTECHNICAL REPORT. CHAIR WIRE FABRIC DURING CONCRETE PLACEMENT TO ENSURE PROPER POSITION IN SLAB. USE VAPOR BARRIER UNDER ALL ENCLOSED INTERIOR SPACES, PER ARCHITECTURAL DRAWINGS.

PLACE CRACK CONTROL JOINTS AS SHOWN ON PLAN OR AT 12 FEET MAXIMUM FOR 4" SLAB, OR 15 FEET MAXIMUM FOR 6" SLAB. JOINT SPACING SHALL NOT EXCEED A 1.5 TO 1 WIDTH TO LENGTH RATIO. CONTRACTOR SHALL SUBMIT A CONTROL JOINT LAYOUT FOR ENGINEER'S AND ARCHITECT'S REVIEW PRIOR TO CONCRETE PLACEMENT. LOCATE CONTROL JOINTS AT COLUMN LINES AND RE-ENTRANT CORNERS TYPICAL. PROVIDE (1) #5 X 4'-0" DIAGONAL BARS AT SLAB RE-ENTRANT CORNERS.

FOR 4" THICK SLABS ON GRADE, PROVIDE 6X6 W1.4XW1.4 WELDED WIRE FABRIC OR 1.5 POUNDS PER CUBIC YARD OF MICRO SYNTHETIC FIBERS (FRC MONO-150 OR EQUAL), UNLESS NOTED OTHERWISE. FOR 6" THICK SLABS ON GRADE, PROVIDE 6X6 W2.9XW2.9 WELDED WIRE FABRIC PLACED 2" BELOW TOP OF SLAB OR 3 POUNDS PER CUBIC YARD OF MACRO SYNTHETIC FIBERS (FORTA FERRO OR EQUAL), UNLESS NOTED OTHERWISE.

CONCRETE ACCESSORIES: HEADED SHEAR STUDS SHALL BE NELSON HEADED ANCHORS WITH FLUXED ENDS OR APPROVED EQUAL. DEFORMED BAR ANCHORS (DBA) SHALL BE NELSON, TYPE D2L, OR APPROVED. STUDS AND DBA SHALL BE AUTOMATICALLY END WELDED WITH THE MANUFACTURER'S STANDARD EQUIPMENT IN ACCORDANCE WITH THEIR RECOMMENDATIONS. HAND WELDING NOT PERMITTED.

PERMANENTLY EXPOSED EMBEDDED PLATES AND ANGLES SHALL BE HOT-DIPPED GALVANIZED AFTER FABRICATION. ACCURATELY POSITION, SUPPORT, AND SECURE EMBEDDED ITEMS AGAINST DISPLACEMENT BY FORMWORK CONSTRUCTION OR CONCRETE PLACEMENT OPERATIONS. SECURELY ATTACH EMBEDDED ITEMS TO FORMWORK PRIOR TO START OF CONCRETE PLACEMENT. "WET-STICKING" OF EMBEDDED ITEMS IS PROHIBITED. NO LOADS OR WELDS SHALL BE PLACED ON EMBEDDED PLATES OR ANGLES FOR A MINIMUM OF 7 DAYS AFTER CASTING.

WHERE NEW CONCRETE IS PLACED AGAINST EXISTING CONCRETE, THE EXISTING CONCRETE SURFACE SHOULD BE CLEANED AND ROUGHENED TO A MINIMUM 1/4" AMPLITUDE.

MASONRY WALLS: MASONRY UNITS SHALL MEET ASTM C90, TYPE 2. ASSEMBLIES SHALL HAVE A MINIMUM COMPRESSIVE STRENGTH OF f'm= 2,000 PSI. MORTAR SHALL BE TYPE "M" OR "S" AND MEET ASTM C270. GROUT SHALL MEET ASTM C476. GROUT STRENGTHS SHALL BE VERIFIED BY STANDARD 28-DAY TESTS PER ASTM C1019. GROUT SHALL CONSIST OF A MIXTURE OF CEMENTITIOUS MATERIALS AND AGGREGATE TO WHICH SUFFICIENT WATER HAS BEEN ADDED TO CAUSE THE MIXTURE TO FLOW WITHOUT SEGREGATION OF THE CONSTITUENTS. ALL CELLS CONTAINING VERTICAL BARS, BOND BEAMS, AND ALL CELLS BELOW GRADE SHALL BE FILLED WITH GROUT. MAXIMUM HEIGHT OF GROUT POUR ALLOWED IS 4'-0" UNLESS CLEAN-OUT OPENING IS PROVIDED AT BOTTOM OF CELLS TO BE FILLED. LOCATE CLEAN-OUT OPENINGS IN AREAS NOT EXPOSED TO VIEW.

UNLESS NOTED OTHERWISE EIGHT INCH MASONRY WALLS SHALL BE PARTIALLY REINFORCED MASONRY WALL CONSTRUCTION WITH #5 AT 48 INCH O.C. IN GROUT FILLED CELLS. ADD (1) #5 REINFORCING BAR EACH SIDE OF OPENINGS EXCEEDING 3 FEET.

PROVIDE REINFORCING BARS AT CORNERS, INTERSECTIONS, AND EACH SIDE OF OPENINGS. PROVIDE (2) REINFORCING BARS EACH SIDE OF OPENINGS OVER 4 FEET WIDE, AND AS SHOWN ON THE PLANS. PROVIDE HOOKED DOWELS INTO FOOTINGS AND STRUCTURE ABOVE AND/OR BELOW TO PROVIDE CONTINUITY. PROVIDE 9 GAGE GALVANIZED HORIZONTAL JOINT REINFORCING (DUR-O-WAL OR ENGINEER-APPROVED EQUAL) AT 16" O.C. REINFORCING LAPS TO BE 48 BAR DIAMETERS.

DO NOT PLACE CONDUITS, PIPES, ETC., IN CELLS WITH VERTICAL REINFORCING. DO NOT RUN CONDUITS, PIPES, ETC., HORIZONTALLY IN CMU WALLS PARALLEL TO LENGTH OF WALL. WHERE MASONRY WALLS ABUT CONCRETE COLUMNS TO BE PLACED PRIOR TO ERECTION OF MASONRY WALLS, PROVIDE DOVETAIL SLOTS BETWEEN COLUMN AND WALLS AND GROUT THE CMU CELL CONTAINING THE DOVETAIL ANCHORS. OTHERWISE, EXTEND CMU HORIZONTAL JOINT REINFORCING THROUGH CONCRETE COLUMN.

CONTROL JOINTS SHALL BE PROVIDED IN ALL CONCRETE MASONRY CONSTRUCTION AT A SPACING NOT TO EXCEED THREE TIMES WALL HEIGHT OR 30'-0" MAXIMUM. COORDINATE LOCATIONS WITH THE ARCHITECTURAL DRAWINGS. HORIZONTAL WALL REINFORCING SHALL BE STOPPED EACH SIDE OF CONTROL JOINTS. SEE ARCHITECTURAL DRAWINGS FOR SEALANT REQUIREMENTS AT CONTROL JOINTS.

USE METAL LATH OR WIRE SCREEN FOR CAVITY CAPS. SHEET METAL, FELT, BUILDING PAPER, OR LIKE MATERIALS ARE PROHIBITED.

TIE BEAMS: TIE BEAMS SHALL BE CONCRETE, POURED AFTER THE BLOCK WALLS BELOW ARE IN PLACE. REINFORCING SHALL BE CONTINUOUS THROUGH TIE BEAMS WITH MINIMUM LAP SPLICES OF 48 BAR DIAMETERS AND BENT BARS AT CORNERS. USE METAL LATH, MORTAR, OR SPECIAL UNITS TO CONFINE CONCRETE TO AREA REQUIRED, IN ACCORDANCE WITH ACI 530.1, SECTION 3.5 B. SOLID METAL OR FELT CAVITY CAPS ARE PROHIBITED.

PRECAST CONCRETE LINTELS: UNLESS INDICATED OTHERWISE, ALL LINTELS TO BE "U" TYPE PRECAST CONCRETE UNITS EQUAL TO UNITS MANUFACTURED BY CAST-CRETE CORP. AND PRESTRESSED (AND ADDITIONALLY REINFORCED AS REQUIRED) IN ACCORDANCE WITH CAST-CRETE CORP. "DESIGN MANUAL", LATEST EDITION, FOR THE SPAN AND LOADING CONDITION RELATIVE TO LINTEL LOCATION.

LINTEL SIZE IF NOT SHOWN ON THE PLANS SHALL BE 8F8-1B FOR OPENINGS LESS THAN 10 FEET AND 8F16-1B/1T FOR OPENINGS 10 FEET TO 20 FEET. PROVIDE 8" MINIMUM BEARING FOR LINTELS UNLESS NOTED OTHERWISE.

STRUCTURAL STEEL: STRUCTURAL STEEL SHALL CONFORM TO THE FOLLOWING:

W-SHAPES	ASTM A992	GRADE 50.
CHANNELS, PLATES AND ANGLES	ASTM A36.	
RECTANGULAR AND SQUARE TUBES	ASTM A500	GRADE C (Fy = 50KSI).

DESIGN, FABRICATION AND ERECTION SHALL BE IN ACCORDANCE WITH THE "AISC SPECIFICATION FOR THE DESIGN, FABRICATION AND ERECTION OF STRUCTURAL STEEL FOR BUILDINGS".

BOLTS SHALL CONFORM TO THE ASTM SPECIFICATION FOR A325 OR A490, HIGH STRENGTH BOLTS.

WELDING SHALL CONFORM TO THE AWS CODES FOR ARC AND GAS WELDING IN BUILDING CONSTRUCTION. WELDS SHALL BE MADE USING E70XX ELECTRODES AND SHALL BE 3/16" MINIMUM UNLESS OTHERWISE NOTED. WELDING SHALL BE BY AWS CERTIFIED WELDERS. PREQUALIFIED WELDING PROCEDURES ARE TO BE USED, UNLESS AWS QUALIFICATION IS SUBMITTED TO THE ENGINEER PRIOR TO FABRICATION.

STEEL TO RECEIVE ONE SHOP COAT AND ONE FIELD TOUCH UP COAT OF APPROVED PAINT, EXCEPT WHERE GALVANIZING IS INDICATED ON THE DRAWINGS. ALL PERMANENTLY EXPOSED STEEL SHALL BE GALVANIZED.

ALL BOLTED CONNECTIONS SHALL CONSIST OF MINIMUM 3/4 INCH DIAMETER ASTM A325 HIGH STRENGTH BOLTS. BEAM CONNECTIONS SHALL BE DESIGNED BY THE FABRICATOR FOR THE REACTIONS SHOWN ON THE PLANS. IF NOT SHOWN, THE FABRICATOR SHALL DESIGN THE BEAM CONNECTIONS TO SUPPORT AN END REACTION OF 1/2 THE ALLOWABLE UNIFORM LOAD CAPACITY WITH A MINIMUM OF 2 BOLTS.

SHEAR STUD CONNECTORS: SHEAR STUD CONNECTORS SHALL BE FABRICATED AND INSTALLED IN ACCORDANCE WITH AWS D1.1 "STRUCTURAL WELDING CODE", SECTION 7 - STUD WELDING. STUDS SHALL BE TYPE 'B', HEADED STUDS HAVING A MINIMUM TENSILE STRENGTH OF 60,000 PSI AND SHALL BE OF LENGTH AND DIAMETER SHOWN ON STRUCTURAL DRAWINGS.

ANCHOR RODS: UNLESS INDICATED OTHERWISE ON THE DRAWINGS, ANCHOR RODS SHALL BE ASTM F1554 GRADE 36 AND THE SIZE SHALL BE 3/4 DIA. AND SHALL EMBED INTO THE CONCRETE FOUNDATION A DISTANCE OF 1'-0" WITH A HEAVY HEX NUT AT THE EMBEDDED END.

PREFABRICATED LIGHT GAUGE METAL TRUSSES: DESIGN AND MANUFACTURE PREFABRICATED LIGHT GAUGE METAL TRUSSES, INCLUDING ALL CONNECTIONS, UPLIFT ANCHORAGE HARDWARE AND FASTENERS IN ACCORDANCE WITH THE REQUIREMENTS OF AISI AND THE RECOMMENDATIONS OF THE PREFABRICATED METAL LIGHT GAUGE TRUSS MANUFACTURER.

LIGHT GAUGE METAL TRUSSES SHALL BE DESIGNED TO SUPPORT THE INDICATED WIND UPLIFT, SUPERIMPOSED DEAD AND LIVE LOADS, AND ADDITIONAL UNIFORM AND CONCENTRATED LOADS ON THE DRAWINGS. USE 5 PSF (MAX) DEAD LOAD FOR UPLIFT DESIGN. IN ADDITION TO GRAVITY AND UPLIFT LOADS, CONNECTIONS TO THE STRUCTURE SHALL BE DESIGNED FOR 1,000 POUND HORIZONTAL LOAD UNO PERPENDICULAR TO PLANE OF THE WALL.

PROVIDE TRUSS MEMBER TEMPORARY AND PERMANENT BRACING CONSISTENT WITH TRUSS MANUFACTURER'S DESIGN CALCULATIONS. ALL TRUSS ANCHORAGES TO BE INSTALLED USING TRUSS MANUFACTURER'S RECOMMENDED FASTENERS. ALL METAL CONNECTION HARDWARE SHALL BE GALVANIZED.

TRUSS DESIGNER TO DETERMINE AND ESTABLISH EXACT HEIGHT, LENGTH, LOCATION, SPACING, AND WEB MEMBER LAYOUT FOR EACH TRUSS.

SUBMIT COMPLETE SHOP DRAWINGS AND DESIGN CALCULATIONS, PREPARED, SIGNED, AND SEALED BY A LICENSED PROFESSIONAL ENGINEER SUBSTANTIATING ALL STRENGTH AND SERVICEABILITY CRITERIA.

PLYWOOD: PLYWOOD PANELS SHALL CONFORM TO THE REQUIREMENTS OF "U.S. PRODUCT STANDARD PS-1 FOR CONSTRUCTION AND INDUSTRIAL PLYWOOD" OR APA PRP-108 PERFORMANCE STANDARDS. UNLESS OTHERWISE NOTED, PANELS SHALL BE APA RATED SHEATHING, EXPOSURE 1, OF THE THICKNESS AND SPAN RATING SHOWN ON THE DRAWINGS.

PLYWOOD INSTALLATION SHALL BE IN CONFORMANCE WITH APA RECOMMENDATIONS. ALLOW 1/8" SPACING AT PANEL EDGES, UNLESS OTHERWISE RECOMMENDED BY THE PANEL MANUFACTURER.

ALL SHEATHING SHALL BE INSTALLED WITH FACE GRAIN PERPENDICULAR TO SUPPORTS, EXCEPT AS INDICATED ON THE DRAWINGS. STAGGER ENDS OF ADJACENT PANELS 4'-0".

ROOF SHEATHING SHALL BE 5/8" PLYWOOD, BLOCKED, TONGUE-AND-GROOVE, OR HAVE EDGES SUPPORTED BY PLYCLIPS. ATTACH PLYWOOD PANELS TO SUPPORTING MEMBERS WITH #12 SCREWS SPACED 4" ON CENTER ALONG THE PANEL EDGES AND AT 6" ON CENTER ALONG INTERMEDIATE SUPPORTS, UNLESS NOTED OTHERWISE.

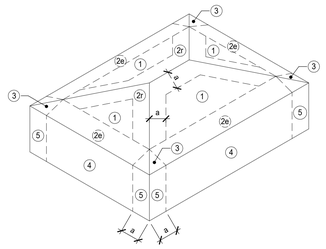

HIP ROOF

ALLOWABLE COMPONENT & CLADDING WIND PRESSURES (PSF)					
ZONE			TRIBUTARY AREA		
			10 SF	50 SF	100 SF
ROOF	INTERIOR	1	25 / -42	17 / -37	14 / -33
	EDGE	2e	25 / -56	17 / -46	14 / -41
	RIDGE	2r	25 / -73	17 / -56	14 / -49
	CORNER	3	25 / -56	17 / -46	14 / -41
WALL	INTERIOR	4	33 / -36	30 / -33	28 / -31
	CORNER	5	33 / -45	30 / -38	28 / -35

a= 3.6 ft

COMPONENT & CLADDING DIAGRAM

SCALE: NOT TO SCALE

HARVARD ● JOLLY
ARCHITECTURE
561-478-4457 | www.HarvardJolly.com | AA C000119

SELECT STRUCTURAL
SELECT STRUCTURAL
12573 New Brittany Blvd
Fort Myers, Florida 33907
Phone: (239) 210-5090
Project No.: 22635
Certification Auth. 28357

ESTERO ON THE RIVER
RESTROOM FACILITY
ESTERO, FLORIDA
CONSTRUCTION DOCUMENTS

Comm. No: 22031.01
Date: 12/09/2022
Drawn: MJG

Revisions

No.	Date	Note

TO THE BEST OF MY KNOWLEDGE, THE PLANS AND SPECIFICATIONS COMPLY WITH THE MINIMUM BUILDING CODES.

GENERAL NOTES

S-001

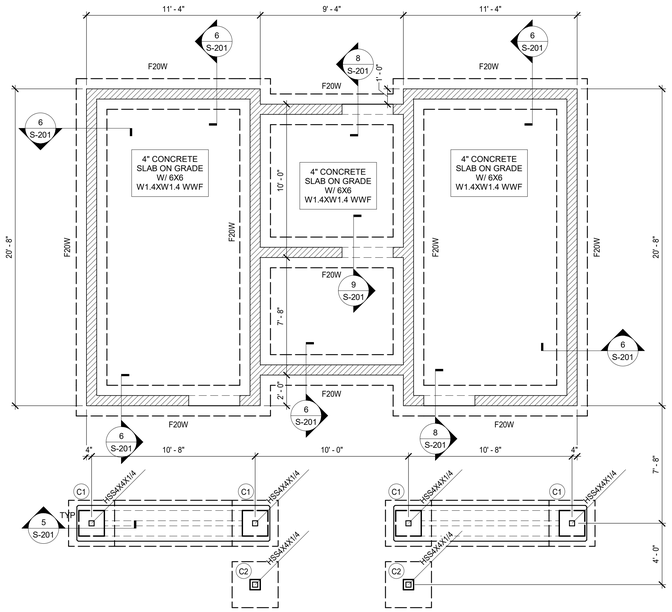

FOUNDATION PLAN

SCALE: 1/4" = 1'-0"

FOUNDATION PLAN NOTES:

1. REFER TO ARCHITECTURAL DRAWINGS FOR VAPOR BARRIER REQUIREMENTS, SLOPES, STEPS, AND DRAIN LOCATIONS IN FLOOR SLABS.

2. REFER TO GEOTECHNICAL RECOMMENDATIONS FOR SUBGRADE COMPACTION AND DRAINAGE REQUIREMENTS.

3. DO NOT SCALE DRAWINGS. VERIFY/COORDINATE ALL DIMENSIONS AND ELEVATIONS WITH ARCHITECTURAL DRAWINGS BEFORE COMMENCING CONSTRUCTION. NOTIFY THE STRUCTURAL ENGINEER AND ARCHITECT OF RECORD OF ANY DISCREPANCIES BEFORE PROCEEDING WITH CONSTRUCTION.

4. VERIFY/COORDINATE THE LOCATION OF ALL UNDERGROUND PIPING WITH THE FOUNDATION.

5. VERIFY/COORDINATE EDGE OF SLAB DETAILS AT EXTERIOR DOORS, SILL HEIGHTS AND DETAILS OF WALL OPENINGS WITH ARCHITECTURAL DRAWINGS.

6. F.X INDICATES FOOTING TYPE, REFER TO FOOTING SCHEDULE ON THIS SHEET. X'-X" INDICATES TOP OF FOOTING ELEVATION, -1'-4" UNLESS NOTED OTHERWISE.

7. INDICATES 8" CMU WALLS W/ #5 VERTICALS AT 48" OC MAX, AND AT CORNERS, INTERSECTIONS AND BOTH SIDES OF OPENINGS, UNLESS NOTED OTHERWISE.

WALL FOUNDATION SCHEDULE

MARK	WIDTH	THICKNESS	REINFORCEMENT	COMMENTS
F20W	2' - 0"	1' - 0"	(3) #5 CONT. BOT	-

PAD FOUNDATION SCHEDULE

MARK	WIDTH	LENGTH	THICKNESS	REINFORCEMENT	COMMENTS
F30	3' - 0"	3' - 0"	1' - 4"	(4) #5 EW BOT	

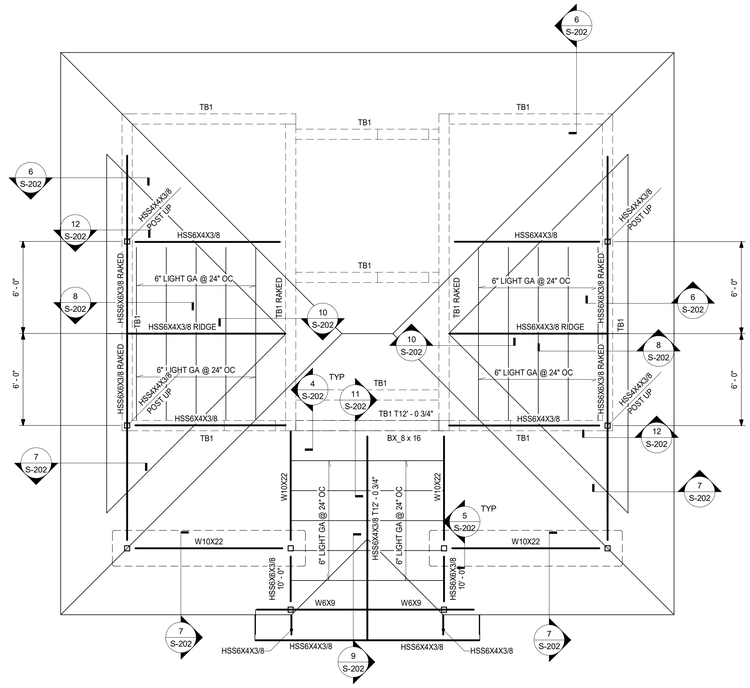

ROOF FRAMING PLAN

SCALE: 1/4" = 1'-0"

ROOF FRAMING PLAN NOTES

1. REFER TO ARCHITECTURAL DRAWINGS FOR ROOF SLOPES AND ACCESS HATCH LOCATIONS.

2. COORDINATE LOCATION OF MECHANICAL EQUIPMENT AND OPENINGS NOT SHOWN ON PLAN.

3. BX — INDICATES CONCRETE BEAM TYPE, REFER TO CONCRETE BEAM SCHEDULE ON THIS SHEET.

4. TX'-X" — INDICATES TOP OF BEAM ELEVATION, 10'-0" UNLESS NOTED OTHERWISE.

5. PMT — INDICATES PRE-ENGINEERED METAL ROOF TRUSSES @ 24" OC. PROVIDE 5/8" PLYWOOD WITH #12 SCREWS AT 4" OC AT PANEL EDGES AND 6" OC AT INTERMEDIATE SUPPORTS, UNLESS NOTED OTHERWISE.

6. PMT-2 — INDICATES PRE-ENGINEERED METAL ROOF SCISSOR TRUSSES @ 24" OC. PROVIDE 5/8" PLYWOOD WITH #12 SCREWS AT 4" OC AT PANEL EDGES AND 6" OC AT INTERMEDIATE SUPPORTS, UNLESS NOTED OTHERWISE.

7. TG — INDICATES PRE-ENGINEERED METAL TRUSS GIRDER.

CONCRETE BEAM SCHEDULE

MARK	DEPTH	WIDTH	REINFORCEMENT TOP	REINFORCEMENT MID	REINFORCEMENT BOT	REINFORCEMENT STIRRUPS	COMMENTS
BX	1' - 4"	8"	(2) #5	-	(2) #5	#3 @ 8" OC	-
TB1	1' - 4"	8"	(2) #5	-	(2) #5	#3 @ 48" OC	-

HARVARD • JOLLY ARCHITECTURE
561-478-4457 | www.HarvardJolly.com | AA C000119

SELECT STRUCTURAL
SELECT STRUCTURAL
12573 New Brittany Blvd
Fort Myers, Florida 33907
Phone: (239) 210-5090
Project No.: 22635
Certification Auth. 28357

ESTERO ON THE RIVER RESTROOM FACILITY
ESTERO, FLORIDA
CONSTRUCTION DOCUMENTS

Comm. No: 22031.01
Date: 12/09/2022
Drawn: MJG

Revisions

No.	Date	Note

TO THE BEST OF MY KNOWLEDGE, THE PLANS AND SPECIFICATIONS COMPLY WITH THE MINIMUM BUILDING CODES.

STRUCTURAL PLANS

S-101

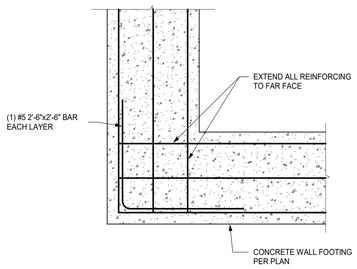

1 TYPICAL FOOTING CORNER
SCALE: NOT TO SCALE

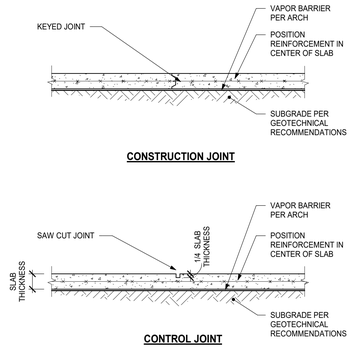

2 TYPICAL SLAB ON GRADE JOINTS
SCALE: NOT TO SCALE

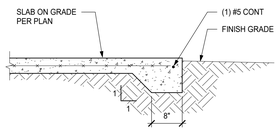

3 THICKENED SLAB EDGE
SCALE: 3/4" = 1'-0"

OPENING WIDTH	LINTEL SIZE
W < 6'	8F8-1B, 12F8-1B
6' < W ≤ 10'	8F16-1B/2T, 12F16-1B/2T
10' < W ≤ 16'	8F24-1B/2T, 12F24-1B/2T

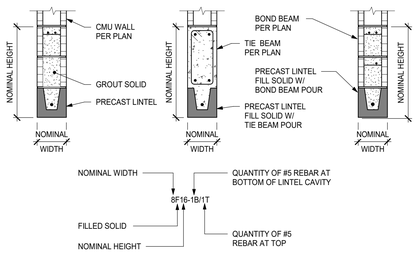

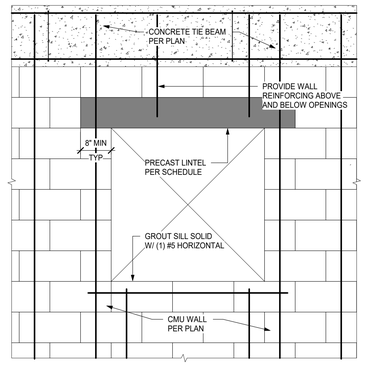

4 TYPICAL CMU WALL OPENING & PRECAST LINTEL SCHEDULE
SCALE: NOT TO SCALE

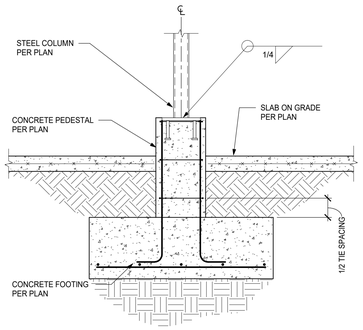

5 EXTERIOR STEEL COLUMN FOOTING
SCALE: NOT TO SCALE

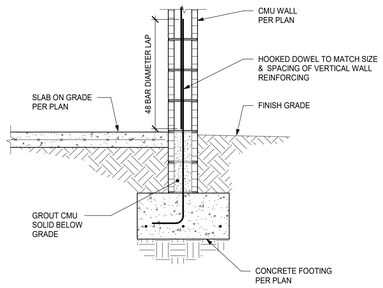

6 CMU STEMWALL FOOTING
SCALE: 3/4" = 1'-0"

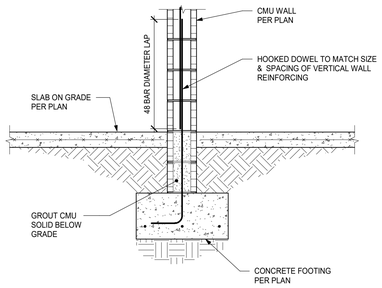

7 CMU STEMWALL FOOTING
SCALE: 3/4" = 1'-0"

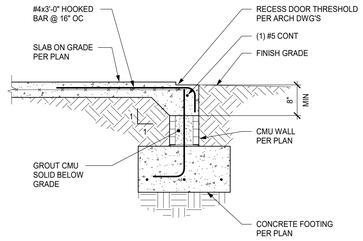

8 STEMWALL AT DOOR THRESHOLD
SCALE: 3/4" = 1'-0"

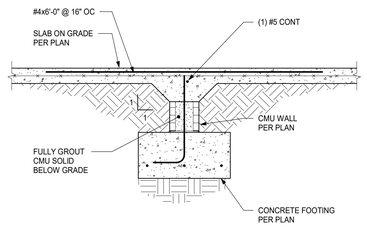

9 STEMWALL AT INTERIOR OPENING
SCALE: 3/4" = 1'-0"

HARVARD ● JOLLY ARCHITECTURE
| 561-478-4457 | www.HarvardJolly.com | AA C000119

SELECT STRUCTURAL
12573 New Brittany Blvd
Fort Myers, Florida 33907
Phone: (239) 210-5090
Project No.: 22635
Certification Auth. 28357

ESTERO ON THE RIVER
RESTROOM FACILITY
ESTERO, FLORIDA
CONSTRUCTION DOCUMENTS

Comm. No: 22031.01
Date: 12/09/2022
Drawn: MJG

Revisions

No.	Date	Note

TO THE BEST OF MY KNOWLEDGE, THE PLANS AND SPECIFICATIONS COMPLY WITH THE MINIMUM BUILDING CODES.

DETAILS

S-201

Filename: C:\Select Structural Dropbox\Select Structural Dropbox\01 Projects\2022 Projects\22635 Estero River Trailhead Restroom\Drawings\Current Arch Drawings\Arch CAD Files\A-101 Plans.Plot
Date: 11-2-2022
Plotted By: Matt

4 LOCATION MAP
SCALE: 1" = 50"

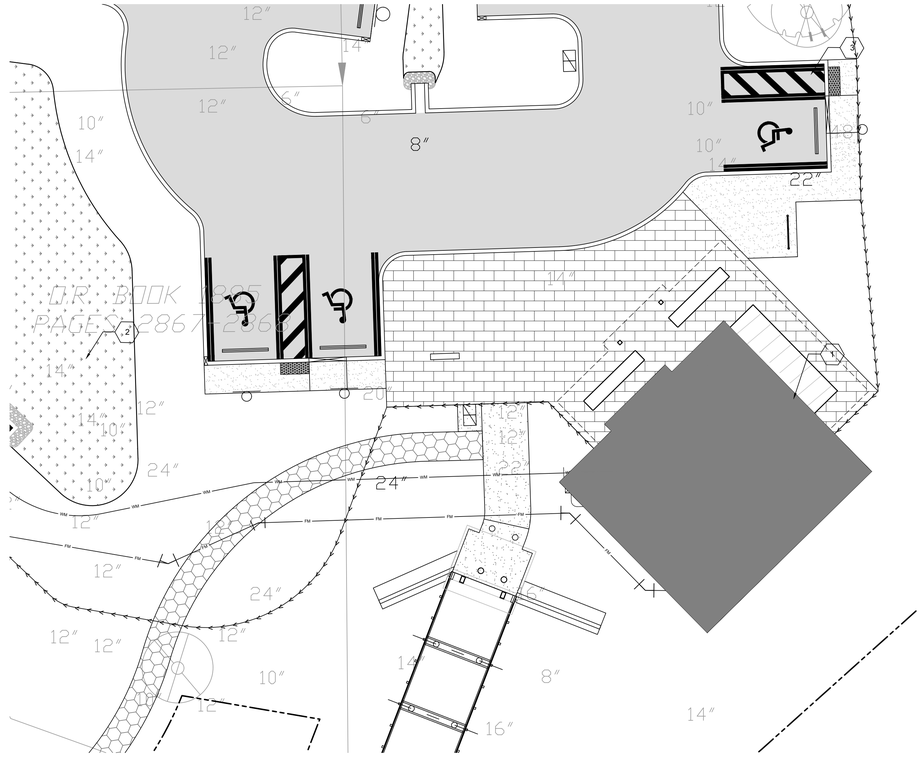

4 ARCHITECTURAL SITE PLAN
SCALE: 3/32" = 1'-0"

SITE KEY NOTES

1. PROPOSED RESTROOM BUILDING
2. PARKING LOT DRAINAGE - SEE CIVIL
3. PARKING LOT - SEE CIVIL

N

HARVARD • JOLLY
ARCHITECTURE
1639 Hendry St. Fort Myers Florida 33901 | 561-478-4457 | www.HarvardJolly.com | AAC000119

ESTERO ON THE RIVER RESTROOM FACILITY

ESTERO ,FLORIDA
CONSTRUCTION DOCUMENTS

Comm. No:	22031.01
Date:	09/08/2023
Drawn:	BKL

Revisions

No.	Date	Note

TO THE BEST OF MY KNOWLEDGE, THE PLANS AND SPECIFICATIONS COMPLY WITH THE MINIMUM BUILDING CODES.

Architect of Record
Licence #

ARCHITECTURAL SITE PLAN

AS-001

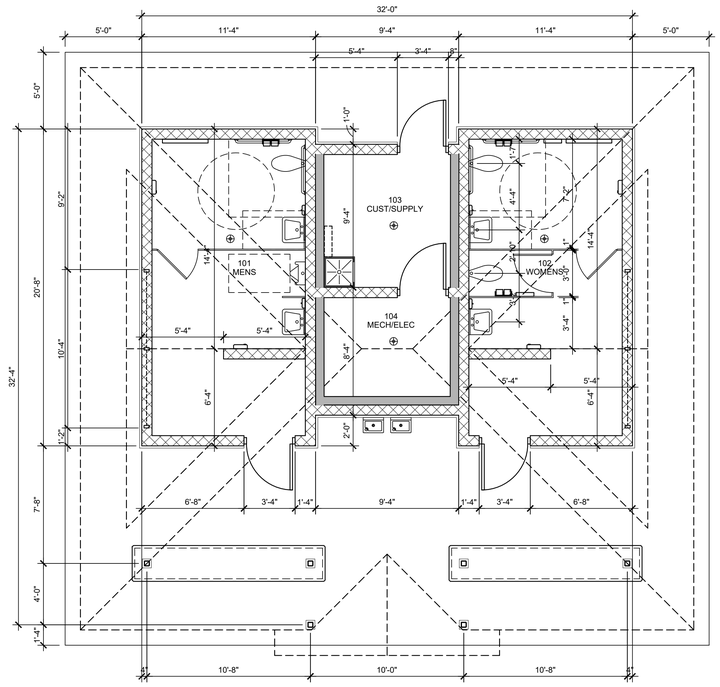

4 DIMENSIONED FLOOR PLAN
SCALE: 1/8" = 1'-0"

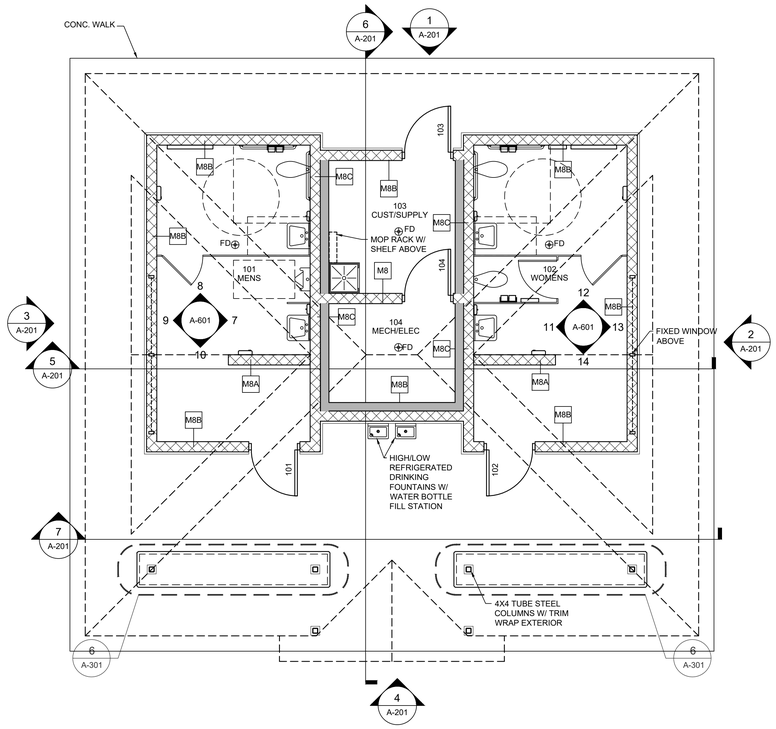

2 NOTED FLOOR PLAN PLAN
SCALE: 1/8" = 1'-0"

WALL DESCRIPTIONS

M8 - 8" NOMINAL CMU EXPOSED EACH SIDE. SEE STRUCTURAL FOR REINFORCEMENT

M8A - 8" NOMINAL CMU WALL WITH FINISH EACH SIDE. SEE STRUCTURAL FOR REINFORCEMENT

M8B - 8" NOMINAL CMU WITH CEMENT BOARD ON P.T. FURRING ON VAPOR BARRIER EXTERIOR AND INTERIOR FINISH OTHER SIDE. FILL OPEN CELLS WITH CORE- FILL 500 FOAM INSULATION. SEE STRUCTURAL FOR REINFORCEMENT

M8C - 8" NOMINAL CMU WITH 5/8" IMPACT RESISTANT ON 6" METAL STUD ATTACHED TO CMU ONE SIDE AND FINISH PANELS THE OTHER. SEE STRUCTURAL FOR REINFORCEMENT

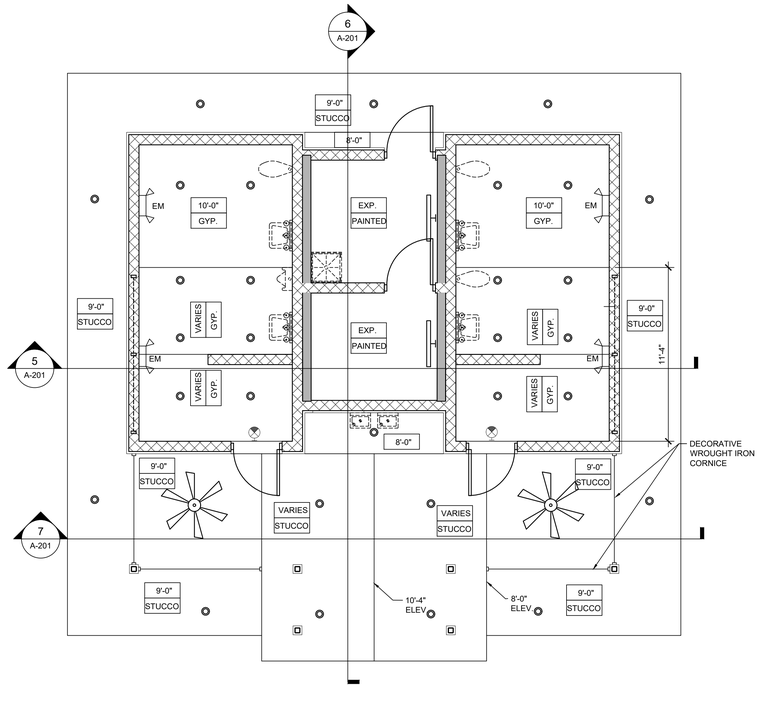

3 CEILING PLAN
SCALE: 1/4" = 1'-0"

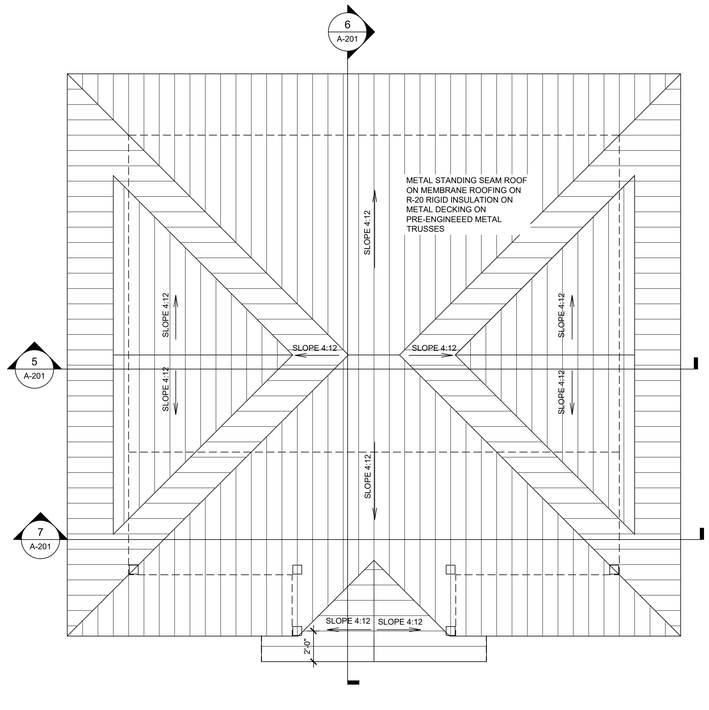

1 ROOF PLAN
SCALE: 1/4" = 1'-0"

N

HARVARD ● JOLLY
ARCHITECTURE
1639 Hendry St. Fort Myers Florida 33901 | 561-478-4457 | www.HarvardJolly.com | AAC000119

ESTERO ON THE RIVER
RESTROOM FACILITY
ESTERO ,FLORIDA
CONSTRUCTION DOCUMENTS

Comm. No:	22031.01
Date:	09/08/2023
Drawn:	*

Revisions

No.	Date	Note

TO THE BEST OF MY KNOWLEDGE, THE PLANS AND SPECIFICATIONS COMPLY WITH THE MINIMUM BUILDING CODES.

Architect of Record
Licence #

PLANS

A-101

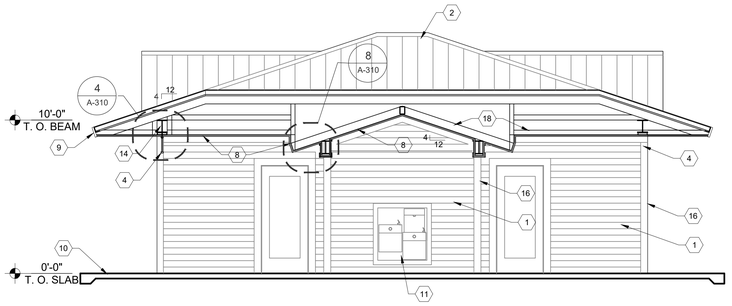

7 BUILDING SECTION
SCALE: 1/4" = 1'-0"

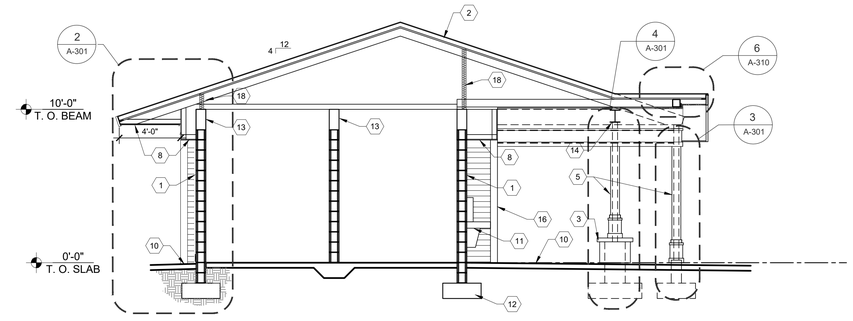

6 BUILDING SECTION
SCALE: 1/4" = 1'-0"

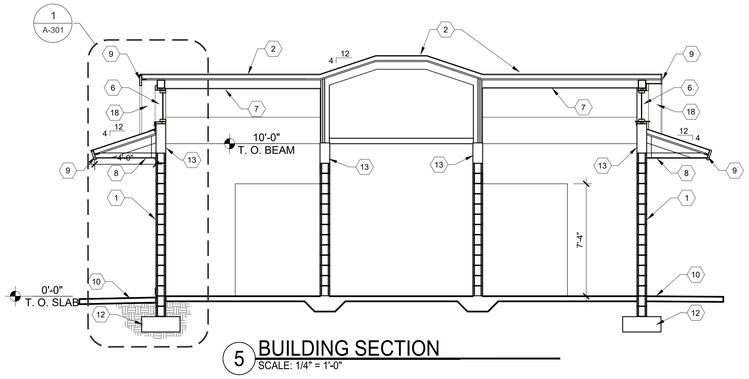

5 BUILDING SECTION
SCALE: 1/4" = 1'-0"

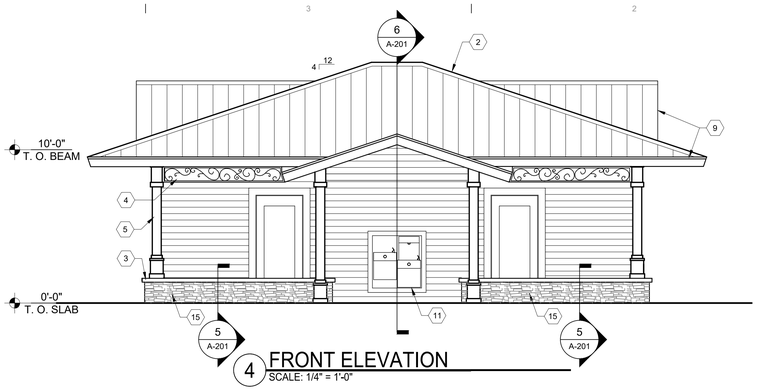

4 FRONT ELEVATION
SCALE: 1/4" = 1'-0"

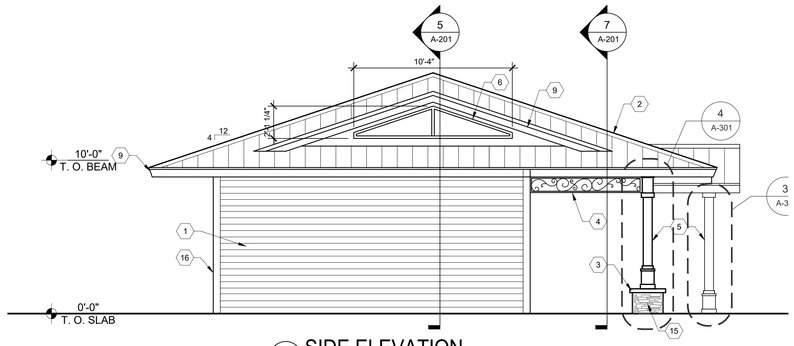

3 SIDE ELEVATION
SCALE: 1/4" = 1'-0"

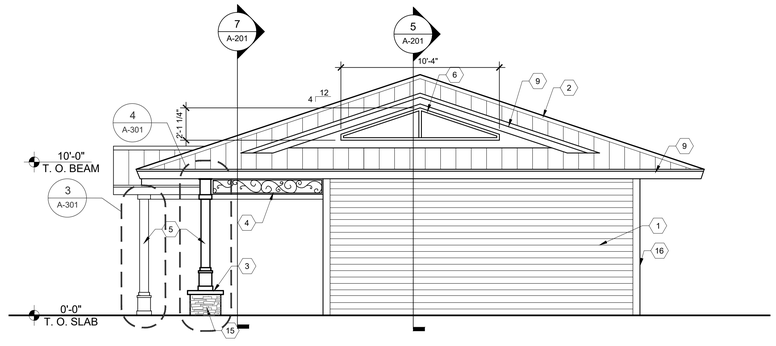

2 SIDE ELEVATION
SCALE: 1/4" = 1'-0"

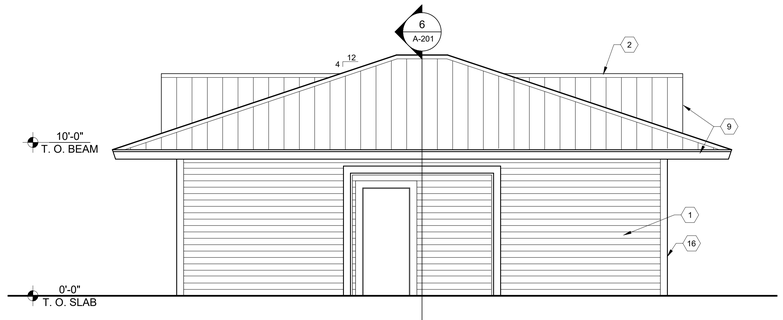

1 REAR ELEVATION
SCALE: 1/4" = 1'-0"

KEY NOTES

1. SHIP-LAP CEMENT BOARD SIDING AND TRIM ON 1X WOOD FURRING ON 8" CMU WITHFILLED CELL INSULATION
2. STANDING-SEAM METAL ROOF ON RIGID INSULATION ON METAL DECK ON PREENGINEERED METAL TRUSSES.
3. PRE-CAST CONCRETE BENCH TOP.
4. DECORATIVE WROUGHT IRON CORNICE - PAINTED.
5. CEMENT BOARD TRIM ON STEEL COLUMN.
6. CLERESTORY ALUMINUM WINDOW WITH IMPACT RESISTANT GLAZING
7. 5/8" GYP. BOARD ON BOTTOM OF METAL TRUSSES.
8. SAND FINISH STUCCO ON EXPANDED LATH ON 5/8" GLASS MAT GYP. BD. ON METAL FRAMING
9. KYNAR FINISH ALUMINUM FASCIA TRIM AND DRIP EDGE.
10. CONCRETE WALK SLOPING AWAY FROM BUILDING.
11. HIGH/LOW REFRIGERATED DRINKING FOUNTAINS W/ WATER BOTTLE FILL STATION.
12. CONCRETE FOOTING PER STRUCTURAL.
13. CONCRETE TIE BEAM OR BOND BEAM PER STRUCTURAL.
14. STEEL BEAM PER STRUCTURAL
15. CAST STONE STONE VENEER
16. 5" CEMENT BOARD CORNER TRIM.
17. KYNAR FINISH ALUMINUM SOFFIT
18. 6" FOIL-FACED BATT INSULATION

HARVARD ● JOLLY
ARCHITECTURE
1639 Hendry St. Fort Myers Florida 33901 | 561-478-4457 | www.HarvardJolly.com | AAC000119

ESTERO ON THE RIVER
RESTROOM FACILITY
ESTERO ,FLORIDA
CONSTRUCTION DOCUMENTS

Comm. No:	22031.01
Date:	09/08/2023
Drawn:	BKL

Revisions

No.	Date	Note

TO THE BEST OF MY KNOWLEDGE, THE PLANS AND SPECIFICATIONS COMPLY WITH THE MINIMUM BUILDING CODES.

Architect of Record
Licence #

ELEVATIONS & BUILDING SECTIONS

A-201

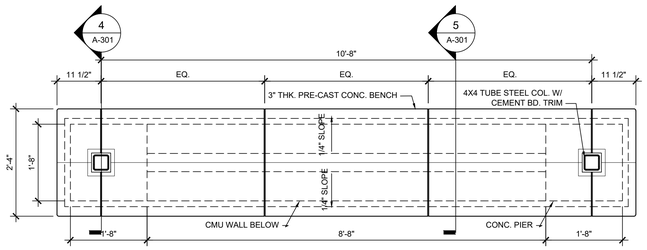

6 BENCH TOP PLAN DETAIL
SCALE: 3/4" = 1'-0"

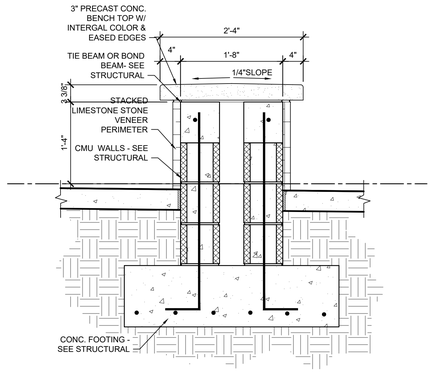

5 BENCH DETAIL
SCALE: 1" = 1'-0"

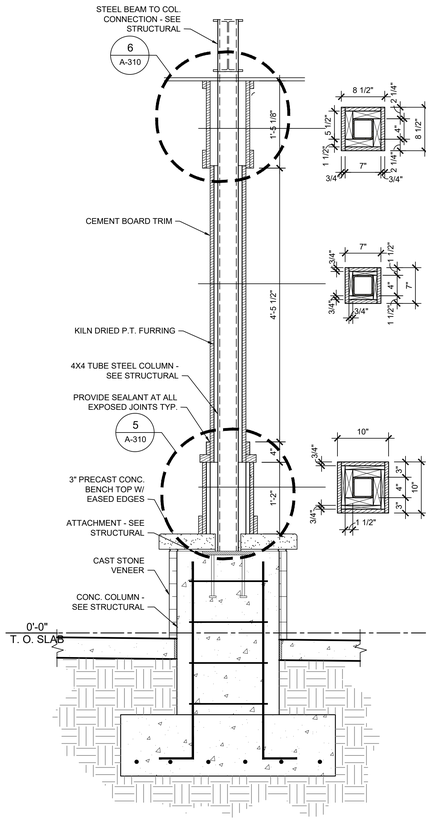

NOTE: ALL COLUMNS WRAP SIMILAR

4 COLUMN DETAIL
SCALE: 1" = 1'-0"

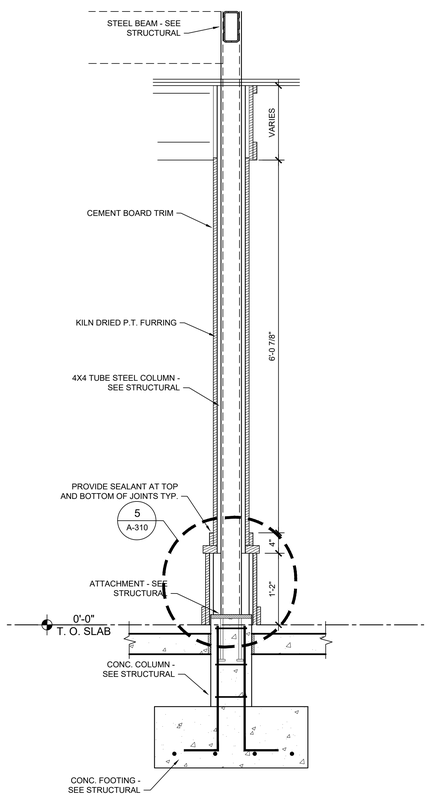

3 BENCH & COLUMN DETAIL
SCALE: 1" = 1'-0"

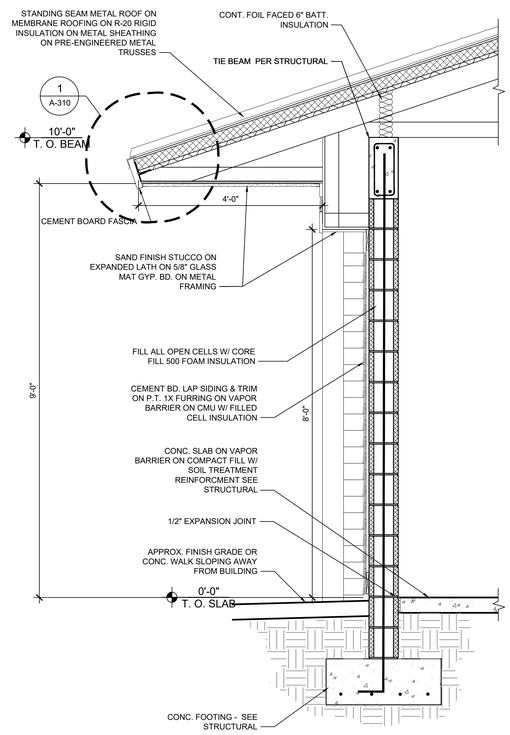

2 WALL SECTION
SCALE: 3/4" = 1'-0"

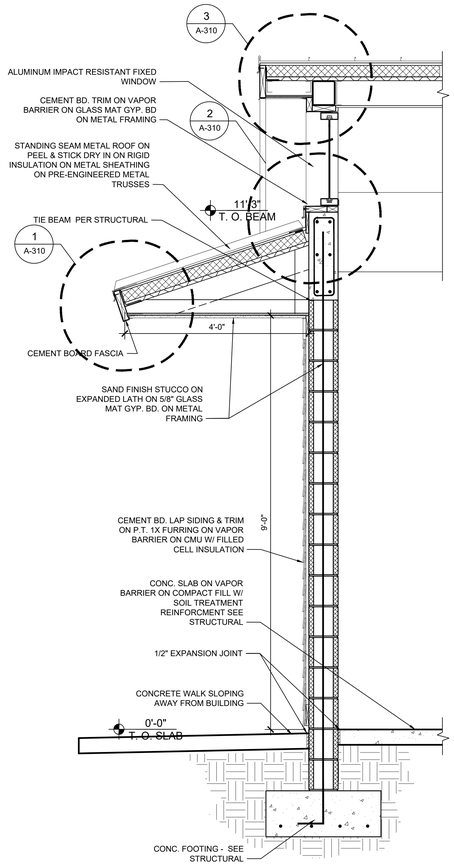

1 WALL SECTION
SCALE: 3/4" = 1'-0"

HARVARD ● JOLLY
ARCHITECTURE
1639 Hendry St. Fort Myers Florida 33901 | 561-478-4457 | www.HarvardJolly.com | AAC000119

ESTERO ON THE RIVER
RESTROOM FACILITY
ESTERO ,FLORIDA
CONSTRUCTION DOCUMENTS

Comm. No:	22031.01
Date:	09/08/2023
Drawn:	BKL

Revisions

No.	Date	Note

TO THE BEST OF MY KNOWLEDGE, THE PLANS AND SPECIFICATIONS COMPLY WITH THE MINIMUM BUILDING CODES.

Architect of Record
Licence #

WALL SECTIONS & DETAILS

A-301

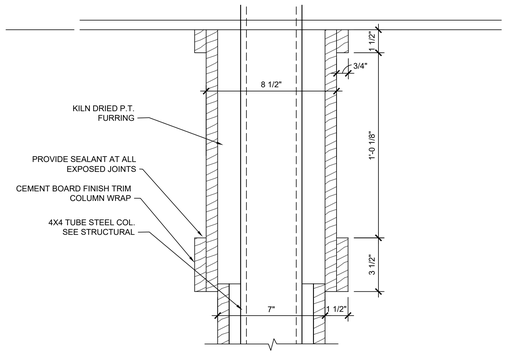

6 COLUMN WRAP CAPITAL DETAIL
SCALE: 3" = 1'-0"

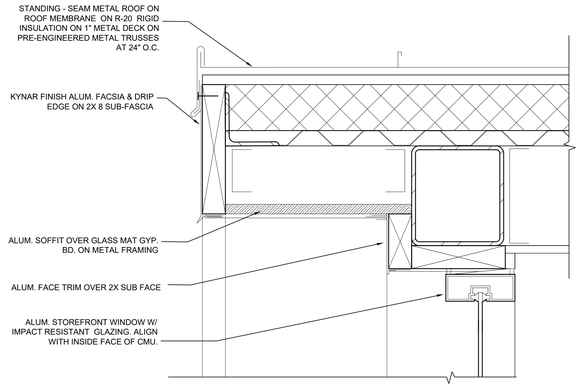

3 WINDOW HEAD AT CLERESTORY
SCALE: 1" = 1'-0"

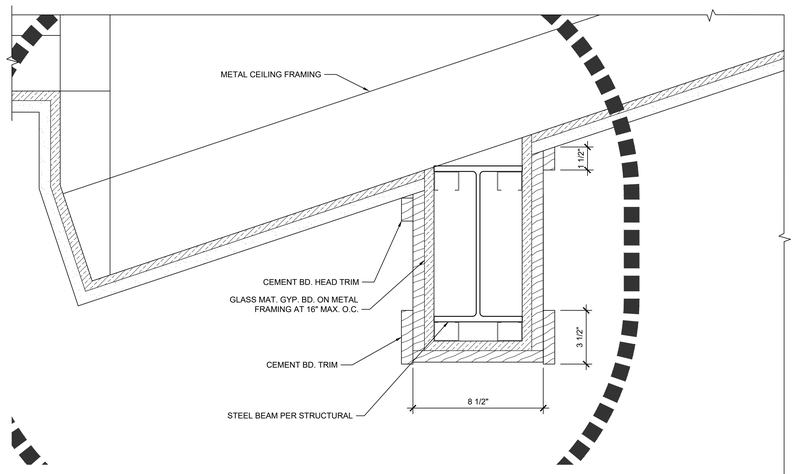

8 BEAM WRAP AT ENTRY
SCALE: 3" = 1'-0"

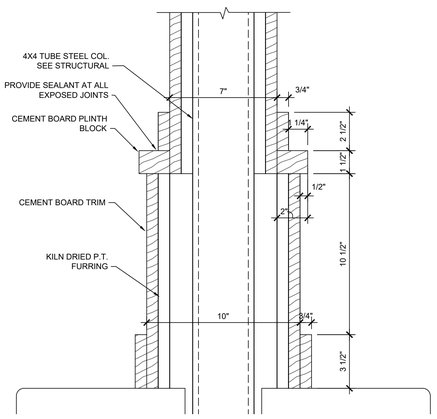

5 COLUMN WRAP BASE DETAIL
SCALE: 3" = 1'-0"

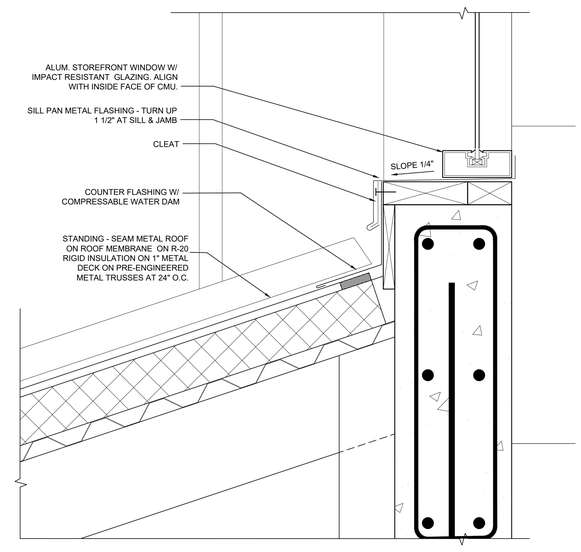

2 WINDOW SILL AT CLERESTORY
SCALE: 3" = 1'-0"

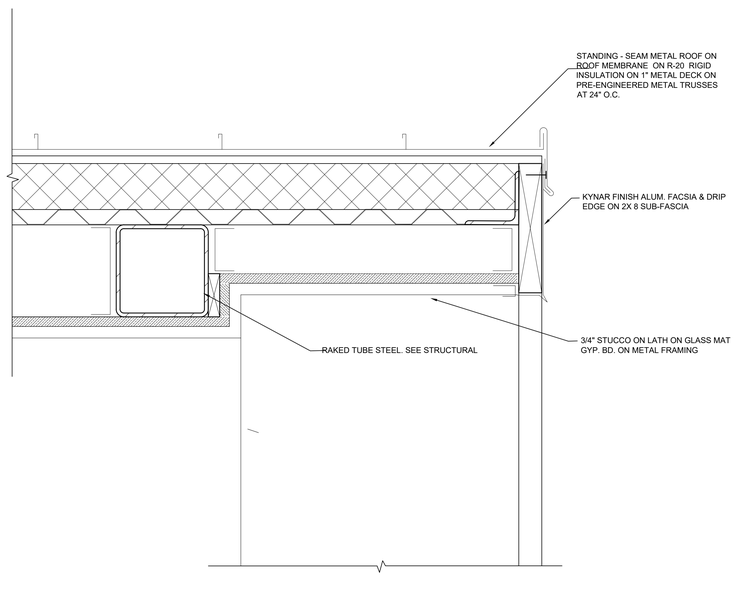

7 OVERHANG AT ENTRY
SCALE: 3" = 1'-0"

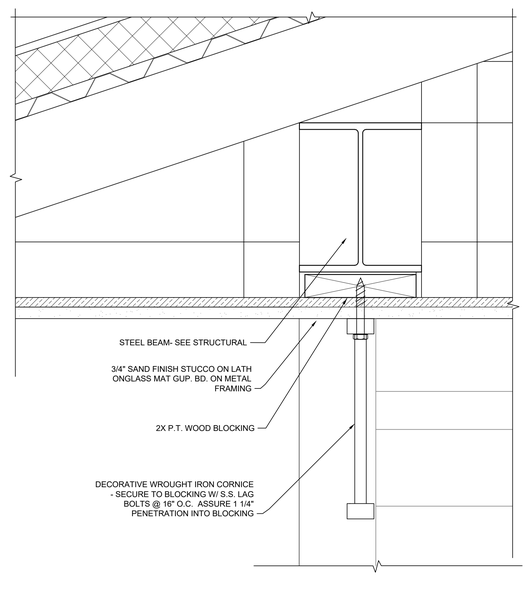

4 WROUGHT IRON DETAIL
SCALE: 3" = 1'-0"

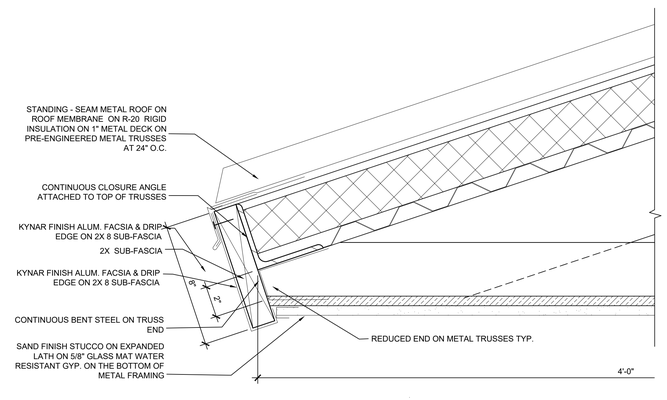

1 FASCIA BOARD DETAIL
SCALE: 3" = 1'-0"

HARVARD • JOLLY
ARCHITECTURE
1639 Hendry St. Fort Myers Florida 33901 | 561-478-4457 | www.HarvardJolly.com | AAC000119

ESTERO ON THE RIVER
RESTROOM FACILITY
ESTERO ,FLORIDA
CONSTRUCTION DOCUMENTS

Comm. No:	22031.01
Date:	09/08/2023
Drawn:	BKL

Revisions

No.	Date	Note

TO THE BEST OF MY KNOWLEDGE, THE PLANS AND SPECIFICATIONS COMPLY WITH THE MINIMUM BUILDING CODES.

Architect of Record
Licence #

DETAILS

A-310

SCHEDULE - FINISHES FIRST FLOOR

ROOM NO.	ROOM NAME	FLOOR FINISH	FLOOR BASE	WALLS NORTH EAST	WALLS NORTH WEST	WALLS SOUTH EAST	WALLS SOUTH WEST	CEILING FINISH	WING WALL	REMARKS
101	MENS	PT	SB	WPB1	WPB1	WPB1	WPB2	P2	WPB2	PROVIDE WALL CORNER GUARDS
102	WOMENS	PT	SB	WPB2	WPB1	WPB1	WPB1	P2	WPB2	PROVIDE WALL CORNER GUARDS
103	CUST/SUPPLY	SC	RB	P1	P1	P1	P1	EXPOSED	-	-
104	MECH/ELECT	SC	RB	P1	P1	P1	P1	EXPOSED	-	-

FINISH LEGEND

P1 - PAINT COLOR 1

P2 - PAINT COLOR 2

WPB1 - WALL PROTECTION BOARD COLOR 1

WPB2 - WALL PROTECTION BOARD COLOR 2

PT- PORCCELAIN TILE

SC- SEALED CONCRETE

RB - RUBBER BASE

SB - ALUMINUM SCHLUTER TRIM

DOOR AND FRAME SCHEDULE

DOOR MARK	TYPE	MATERIAL	WIDTH	HEIGHT	FRAME	DETAILS JAMB	HEAD	THRESH.	HDWR. SET	REMARKS
101	A	AL.	3'-0"	7'-0"	AL.	2/A-601	3/A-601	1/A-601	01	IMPACT RESISTANT GLAZING W/ WHITE INNER LAYER
102	A	AL.	3'-0"	7'-0"	AL.	2/A-601	3/A-601	1/A-601	01	IMPACT RESISTANT GLAZING W/ WHITE INNER LAYER
103	B	AL.	3'-0"	7'-0"	AL.	2/A-601	3/A-601	1/A-601	02	-
104	B	WD.	3'-0"	7'-0"	HM	4/A-601	5/A-601	NA	03	-

Hardware Group No. 01
For use on Door #(s):
101 102
Provide each SGL door(s) with the following:

QTY		DESCRIPTION	CATALOG NUMBER
3	EA	HINGE	5BB1HW 4.5 X 4.5 NRP
1	EA	ELEC CLASSROOM LOCK	CD-200-CY-70-KP-RHO-J 4B BATTERY OPERATED
1	EA	SURFACE CLOSER	4040XP RW/PA
1	EA	WALL STOP	WS406/407CCV
1	EA	GASKETING	488SBK PSA
1	EA	THRESHOLD	65A-226
	EA	NOTE	CYLINDER AS REQUIRED TO MATCH MASTER SYSTEM

ITEM ID	FINISH	MFR
	630	IVE
	626/626	SCE
	AM	
	689	LCN
	630	IVE
	BK	ZER
	A	ZER
		B/O

Hardware Group No. 02
For use on Door #(s):
103
Provide each SGL door(s) with the following:

QTY		DESCRIPTION	CATALOG NUMBER
3	EA	HINGE	5BB1HW 4.5 X 4.5 NRP
1	EA	STOREROOM LOCK	ND80JD RHO
1	EA	SURFACE CLOSER	4040XP RW/PA
1	EA	WALL STOP	WS406/407CCV
1	EA	GASKETING	488SBK PSA
1	EA	THRESHOLD	65A-226
	EA	NOTE	CYLINDER AS REQUIRED TO MATCH MASTER SYSTEM

ITEM ID	FINISH	MFR
	630	IVE
	626	SCH
	689	LCN
	630	IVE
	BK	ZER
	A	ZER
		B/O

Hardware Group No. 03
For use on Door #(s):
104
Provide each SGL door(s) with the following:

QT Y		DESCRIPTION	CATALOG NUMBER
3	EA	HINGE	5BB1 4.5 X 4.5
1	EA	STOREROOM LOCK	ND80JD RHO
1	EA	WALL STOP	WS406/407CCV
1	EA	GASKETING	488SBK PSA
	EA	NOTE	CYLINDER AS REQUIRED TO MATCH MASTER SYSTEM

ITEM ID	FINISH	MFR
	652	IVE
	626	SCH
	630	IVE
	BK	ZER
		B/O

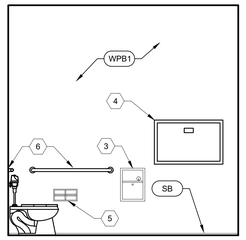

12 INTERIOR ELEVATION
SCALE: 3/8" = 1'-0"

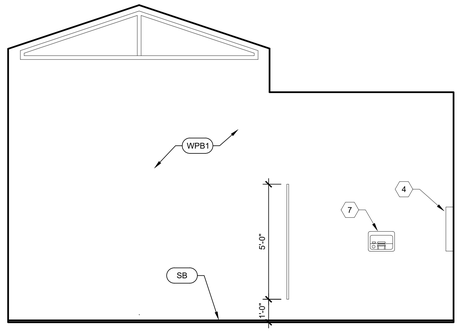

9 INTERIOR ELEVATION
SCALE: 3/8" = 1'-0"

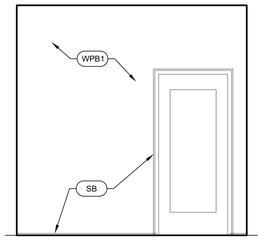

14 INTERIOR ELEVATION
SCALE: 3/8" = 1'-0"

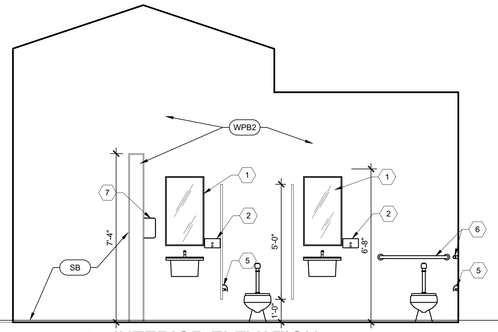

11 INTERIOR ELEVATION
SCALE: 3/8" = 1'-0"

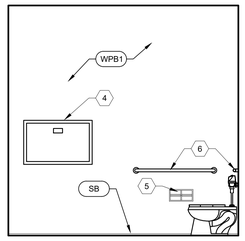

8 INTERIOR ELEVATION
SCALE: 3/8" = 1'-0"

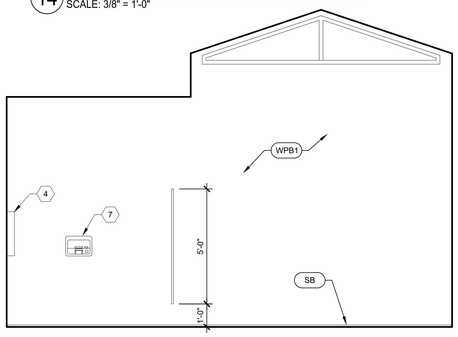

13 INTERIOR ELEVATION
SCALE: 3/8" = 1'-0"

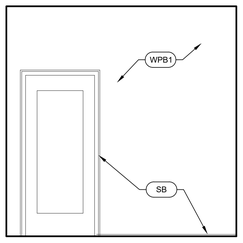

10 INTERIOR ELEVATION
SCALE: 3/8" = 1'-0"

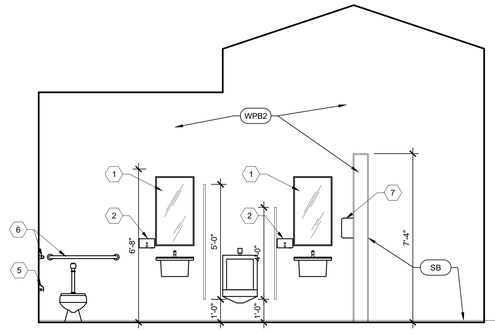

7 WEST INTERIOR ELEVATION
SCALE: 3/8" = 1'-0"

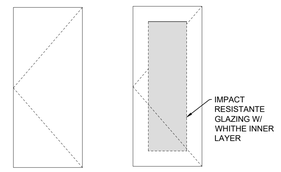

TYPE A (FLUSH) TYPE B (FULL GLASS)

6 DOOR TYPES
SCALE: N.T.S.

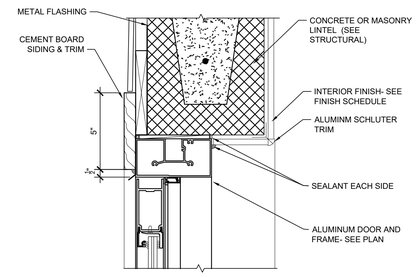

3 EXTERIOR HEAD DETAIL
SCALE: 3" = 1'-0"

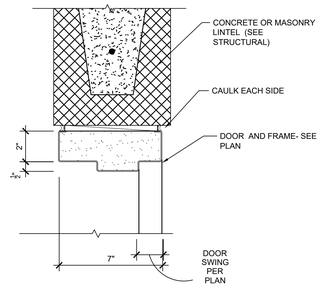

5 INTERIOR HEAD DETAIL
SCALE: 3" = 1'-0"

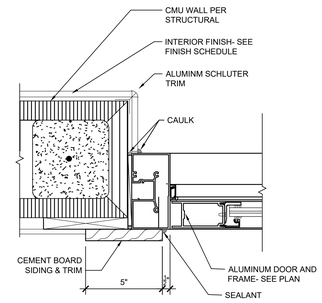

2 EXTERIOR JAMB DETAIL
SCALE: 3" = 1'-0"

TOILET ACCESSORY MOUNTING HEIGHTS

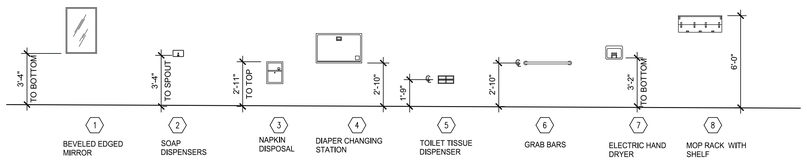

NOTE: MOUNTING HEIGHTS ARE THE SAME FOR FIXTURES AND ACCESSORIES INSTALLED IN REGULAR TOILET STALLS.

TOILET FLUSH VALVE CONTROLS SHALL BE MOUNTED ON THE WIDE SIDE OF THE TOILET AREA, AT A HEIGHT OF NO MORE THAN 44" A.F.F.

ALL DIMENSIONS ARE FROM FACE OF FINISH

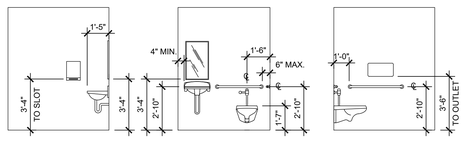

TYPICAL ACCESSIBLE TOILET ROOM ELEVATIONS

TOILET ACCESSORY SCHEDULE

SEE SYMBOLS ON PLANS

1 MIRRORS
B-290 1'-6"X 3'-0" WITH BEVELED EDGES

2 SOAP DISPENSERS
B-2112 - SURFACE

3 SANITARY NAPKIN DISPOSAL
B-254 - SURFACE

4 CHILDCARE UNITS
B-2200 DIAPER CHANGING STATION

5 TOILET TISSUE DISPENSERS
B-7686 - SURFACE DOUBLE

6 GRAB BARS
B-6806 X 36 STRAIGHT 36"
B-6806 X 42 STRAIGHT 42"

7 ELECTRIC HAND DRYERS
B-700 - AUTO PILOT

8 MOP RACKS
B-223 X INSERT LENGTH

ACCESSORY NOTES:

1. LAVATORIES AND SINKS SHALL BE INSTALLED A MINIMUM OF 4" FROM SIDE OF WALL. FAUCETS SHALL BE INSTALLED WITH A MINIMUM OF 5" FROM THE OUTLET TO THE FLOOD RIM OF SINKS, INCLUDING THOSE EQUIPPED WITH VACUUM BREAKERS. TOILETS SHALL BE SET 18" FOR HANDICAPPED FROM CENTERLINE TO FACE OF WALL OR LAVATORY. COORDINATE INSTALLATION OF SINKS, PLUMBING AND ELECTRICAL ITEMS IN AND ADJACENT TO CASEWORK. PROVIDE AT LEAST 24" CLEARANCE FOR ACCESS TO FOOT PEDAL VALVES AT CLINICAL SINKS.

2. TYPICAL TOILET ROOM/STALL DETAILS ARE BASED UPON SINKS THAT ARE 22"W X 18"D AND ON 33" LONG TOILETS. DIFFERENT SIZED FIXTURES MAY ALLOW OR REQUIRE REVISIONS TO THE ROOM OR STALL DIMENSIONS.

3. TOILET ACCESSORIES SHALL NOT PROTRUDE MORE THAN 4" INTO A PATH OF TRAVEL OR A REQUIRED TURNING SPACE.

4. TYPICAL TOILET ROOM DETAILS MAY NOT APPLY TO ALL TOILET ROOMS. DETAILS SHOWN ON FLOOR PLANS AND ENLARGED FLOOR PLANS TAKE PRECEDENCE OVER TYPICAL DETAILS.

5. SPECIFICATIONS AND SIZES OF ACCESSORIES ARE BASED ON BOBRICK BOBRICK WASHROOM EQUIPMENT U.N.O. SEE SPECIFICATIONS FOR LIST OF APPROVED MANUFACTURERS.

6. ALL EQUIPMENT SHOWN SHALL BE STAINLESS STEEL, SATIN FINISH (U.N.O.).

7. NOTE: ALL EXPOSED PIPING AT LAVATORIES SHALL BE INSULATED WITH HANDI LAV-GUARD OR APPROVED EQUAL, WHITE.

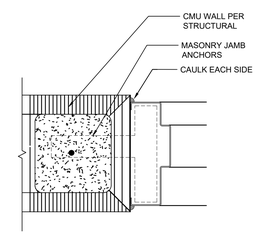

4 INTERIOR JAMB DETAIL
SCALE: 3" = 1'-0"

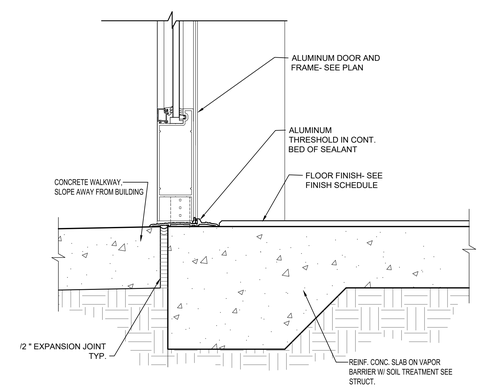

1 EXTERIOR THRESHOLD DETAIL
SCALE: 3" = 1'-0"

HARVARD ● JOLLY ARCHITECTURE
1639 Hendry St. Fort Myers Florida 33901 | 561-478-4457 | www.HarvardJolly.com | AAC000119

ESTERO ON THE RIVER RESTROOM FACILITY
ESTERO ,FLORIDA
CONSTRUCTION DOCUMENTS

Comm. No: 22031.01
Date: 09/08/2023
Drawn: BKL

Revisions

No.	Date	Note

TO THE BEST OF MY KNOWLEDGE, THE PLANS AND SPECIFICATIONS COMPLY WITH THE MINIMUM BUILDING CODES.

Architect of Record
Licence #

DOOR & FINISH SCHEDULE & DETAILS

A-601

SECTION 03 45 00 - PRECAST ARCHITECTURAL CONCRETE
PART 1 - PRODUCTS
1.1 PRECAST ELEMENTS
A. Provide precast elements as indicated on the drawings.
1.2 MOLD MATERIALS
A. Molds: Rigid, dimensionally stable, non-absorptive material, warp and buckle free, that provides continuous and true precast concrete surfaces within fabrication tolerances indicated; nonreactive with concrete and suitable for producing required finishes.
B. Mold-Release Agent: Commercially produced form-release agent that does not bond with, stain or adversely affect precast concrete surfaces and does not impair subsequent surface or joint treatments of precast concrete.
1.3 CONCRETE MATERIALS
A. Portland Cement: ASTM C150/C150M, Type I or Type III, unless otherwise indicated.
1. For surfaces exposed to view in finished structure, use gray or white cement as selected by the architect, of same type, brand, and mill source.
B. Normal-Weight Aggregates: Except as modified by PCI MNL 117, ASTM C33/C33M, with coarse aggregates complying with Class 5S. Stockpile fine and coarse aggregates for each type of exposed finish from a single source (pit or quarry) for Project.
1. Face-Mixture-Fine Aggregates: Selected, natural or manufactured sand compatible with coarse aggregate; to match approved finish sample.
C. Water: Potable; free from deleterious material that may affect color stability, setting, or strength of concrete and complying with chemical limits of PCI MNL 117.
1.4 CONCRETE ADMIXTURES
A. Content of admixtures will be required from the admixture manufacturer prior to mix design review by the Architect.
B. Air-Entraining Admixture: ASTM C260, certified by manufacturer to be compatible with other required admixtures.
C. Coloring Admixture (Where indicated): ASTM C 979/C 979M, synthetic or natural mineral-oxide pigments or colored water-reducing admixtures, temperature stable, and nonfading.
D. Integral Water Repellent: Provide integral water repellent for exterior exposed units. Provide liquid polymeric, integral water-repellent admixture that does not reduce flexural bond strength. Units made with integral water repellent, when tested according to ASTM E 514 as a wall assembly made with mortar containing integral water-repellent manufacturer's mortar additive, with test period extended to 24 hours, shall show no visible water or leaks on the back of test specimen.
1. Products: Subject to compliance with requirements, provide one of the following:
a. ACM Chemistries, Inc.; RainBloc.
b. BASF Aktiengesellschaft; Rheopel Plus.
c. Grace Construction Products, W. R. Grace & Co. - Conn.; Dry-Block
E. Prohibited Admixtures: Calcium chloride or admixtures containing more than 0.05 percent chloride ions are not permitted.
1.5 MORTAR AND GROUT MATERIALS
A. Masonry Cement: ASTM C 91.
1. Products: Subject to compliance with requirements, provide one of the following:
a. Essroc, Italcementi Group
b. Holcim (US) Inc.; White Mortamix Masonry Cement
c. Lafarge North America Inc.; Trinity White Masonry Cement
d. Lehigh Cement Company; Lehigh White Masonry Cement
B. Aggregate for Mortar: ASTM C 144.
1. For mortar that is exposed to view, use washed aggregate consisting of natural sand or crushed stone.
2. For joints less than 1/4 inch 6 mm thick, use aggregate graded with 100 percent passing the No. 16 1.18-mmsieve.
C. Aggregate for Grout: ASTM C 404.
D. Water-Repellent Admixture: Liquid water-repellent mortar admixture containing integral water repellent by same manufacturer as concrete- repellent admixture.
1. Products: Subject to compliance with requirements, provide one of the following:
a. ACM Chemistries, Inc.; RainBloc for Mortar.
b. BASF Aktiengesellschaft; Rheopel Mortar Admixture.
c. Grace Construction Products, W. R. Grace & Co. - Conn.; Dry-Block Mortar Admixture.
1.6 ACCESSORIES
A. Graffiti Control: Subject to compliance with requirements, provide the following: Sure Klean Seal Block-Guard and Graffiti Control by PROSOCO, Inc.
1.7 CONCRETE MIXTURES
A. Prepare design mixtures for each type of precast concrete required.
1. Use a single design mixture for units with more than one major face or edge exposed.
2. Where only one face of unit is exposed use either a single design mixture or separate mixtures for face and backup.
B. Design mixtures may be prepared by a qualified independent testing agency or by qualified precast plant personnel at architectural precast concrete fabricator's option.
C. Normal-Weight Concrete Mixtures: Proportion by either laboratory trial batch or field test data methods according to ACI 211.1, with materials to be used on Project, to provide normal-weight concrete with the following properties:
1. Compressive Strength (28 Days): 5000 psi minimum.
2. Maximum Water-Cementitious Materials Ratio: 0.45.
D. Water Absorption: 6 percent by weight or 14 percent by volume, tested according to ASTM C 642, except for boiling requirement.
1.8 REINFORCING MATERIALS
A. Reinforcing Bars: ASTM A615/A615M, Grade 60, deformed.
B. Plain-Steel Welded Wire Reinforcement: ASTM A185/A185M, fabricated from galvanized-steel wire into flat sheets.
1.9 CONNECTION MATERIALS
A. General: Furnish loose connection hardware and anchorage items to be embedded in or attached to other construction without delaying the Work. Provide locations, setting diagrams, templates, instructions, and directions, as required, for installation. Provide clips, hangers, high-density plastic or steel shims and other accessories required to install architectural precast concrete units.
B. Stainless-Steel Plate: ASTM A 666, Type 304, Type 316, or Type 201.
C. Stainless-Steel Bolts and Studs: ASTM F593, Alloy Group 1 or 2 (ASTM 738M, Grade A1 or A4) hex-head bolts and studs; ASTM F594, Alloy Group 1 or 2 (ASTM F836M, Grade A1 or A4) stainless-steel nuts; and flat, stainless-steel washers.
1. Lubricate threaded parts of stainless-steel bolts with an anti-seize thread lubricant during assembly.
D. Stainless-Steel-Headed Studs: ASTM A276, Alloy 304 or Alloy 316, with minimum mechanical properties of PCI MNL 117, Table 3.2.3.
E. Materials: Provide ties and anchors suitable for precast concrete anchorage conditions and are made from materials that comply with the following unless otherwise indicated:

1. Stainless-Steel Wire: ASTM A580/A580M, Type 304 or Type 316.
2. Stainless-Steel Sheet: ASTM A240/A240M or ASTM A666, Type 304 or Type 316.
F. Precast Accessories: Provide clips, hangers, high-density plastic or steel shims, and other accessories required to install architectural precast concrete units.
1.10 MOLD FABRICATION
A. Molds: Accurately construct molds, mortar tight, of sufficient strength to withstand pressures due to concrete-placement operations and temperature changes and for prestressing and detensioning operations. Coat contact surfaces of molds with release agent before reinforcement is placed. Avoid contamination of reinforcement and prestressing tendons by release agent.
1.11 FABRICATION
A. Fabricate precast elements to shapes, configurations and sizes as indicated on drawings.
B. Cast-in Anchors, Inserts, and Other Anchorage Hardware: Fabricate anchorage hardware with sufficient anchorage and embedment to comply with design requirements. Accurately position for attachment of loose hardware, and secure in place during pre-casting operations. Locate anchorage hardware where it does not affect position of main reinforcement or concrete placement.
C. Furnish loose hardware items including steel plates, clip angles, seat angles, anchors, dowels, cramps, hangers, and other hardware shapes for securing architectural precast concrete units to supporting and adjacent construction.
D. Reinforcement: Comply with recommendations in PCI MNL 117 for fabricating, placing, and supporting reinforcement.
E. Place concrete in a continuous operation to prevent cold joints or planes of weakness from forming in precast concrete units.
1. Place backup concrete mixture to ensure bond with face-mixture concrete.
F. Thoroughly consolidate placed concrete by internal and external vibration without dislocating or damaging reinforcement and built-in items, and minimize pour lines, honeycombing, or entrapped air voids on surfaces. Use equipment and procedures complying with PCI MNL 117.
G. Comply with PCI MNL 117 for hot- and cold-weather concrete placement.
H. Identify pickup points of architectural precast concrete units and orientation in structure with permanent markings, complying with markings indicated on Shop Drawings. Imprint or permanently mark casting date on each architectural precast concrete unit on a surface that does not show in finished structure.
I. Cure concrete, according to requirements in PCI MNL 117, by moisture retention without heat or by accelerated heat curing using low-pressure live steam or radiant heat and moisture. Cure units until compressive strength is high enough to ensure that stripping does not have an effect on performance or appearance of final product.
J. Discard and replace architectural precast concrete units that do not comply with requirements, including structural, manufacturing tolerance, and appearance, unless repairs meet requirements in PCI MNL 117 and Architect's approval.
1.12 FABRICATION TOLERANCES
A. Erect precast units level, plumb, square, and in alignment without exceeding the noncumulative erection tolerances of PCI MNL 117, Appendix I.
B. Fabricate architectural precast concrete units to shapes, lines, and dimensions indicated so each finished unit complies with the following product tolerances:
1. Overall Length and Width Tolerance of Units: Measured at 10 feet or under, plus or minus 1/8 inch.
1.13 FINISHES
A. Exposed faces shall be free of joint marks, grain, and other obvious defects. Corners, including false joints shall be uniform, straight, and sharp. Finish exposed-face surfaces of architectural precast concrete units as selected by the Architect.
PART 2 - EXECUTION
2.1 EXAMINATION
A. Examine supporting structural frame or foundation and conditions for compliance with requirements for installation tolerances, bearing surface tolerances, and other conditions affecting performance of the Work.
B. Proceed with installation only after unsatisfactory conditions have been corrected.
2.2 INSTALLATION
A. Install clips, hangers, bearing pads, and other accessories required for connecting architectural precast concrete units to supporting members and backup materials.
B. Erect architectural precast concrete level, plumb, and square within specified allowable tolerances. Provide temporary supports and bracing as required to maintain position, stability, and alignment of units until permanent connections are completed.
C. Connect architectural precast concrete units in position by bolting, welding, grouting, or as otherwise indicated on Shop Drawings. Remove temporary shims, wedges, and spacers as soon as practical after connecting and grouting are completed.
D. Welding: Comply with applicable requirements in AWS D1.1/D1.1M and AWS D1.4/D1.4M for welding, welding electrodes, appearance, quality of welds, and methods used in correcting welding work.
E. Grouting or Dry-Packing Connections and Joints: Grout connections where required or indicated. Retain flowable grout in place until hard enough to support itself. Alternatively, pack spaces with stiff dry-pack grout material, tamping until voids are completely filled. Place grout and finish smooth, level, and plumb with adjacent concrete surfaces. Promptly remove grout material from exposed surfaces before it affects finishes or hardens. Keep grouted joints damp for not less than 24 hours after initial set.
F. Water Repellant: Apply water repellant as per manufacturer's recommendations.
2.3 ERECTION TOLERANCES
A. Erect architectural precast concrete units level, plumb, square, and in alignment without exceeding the noncumulative erection tolerances of PCI MNL 117, Appendix I.
B. Erect architectural precast concrete units level, plumb, square, and in alignment, without exceeding a tolerance 1/4" in 10'-0".
END OF SECTION 03 45 00

SECTION 04 72 00 - CAST STONE MASONRY VENEER
2.1 MANUFACTURERS
A. Manufacturer shall be the following however products of other manufacturers will be considered for acceptance provided they equal or exceed the material requirements and functional qualities of the specified product and acceptance is provided by the Architect in writing prior to bidding.
1. Northfield Block Co. an Oldcastle Company
2.2 CAST-STONE UNITS
A. Basis of Design: "Echelon Masonry Stone Veneers"
B. Type: Hillcrest Stone
C. Face: Ground face and chisel face textures as indicated on drawings.
D. Size: As indicated on drawings.
E. Color: Pewter.
F. Cast-Stone Units: Comply with ASTM C 1364.
G. Fabricate units with sharp arris and accurately reproduced details, with indicated texture on all exposed surfaces.
H. Fabrication Tolerances:
1. Variation in Cross Section: Do not vary from indicated dimensions by more than 1/8 inch.
2. Variation in Length: Do not vary from indicated dimensions by more than 1/4 inch.
3. Warp, Bow, and Twist: Not to exceed 1/8 inch, whichever is greater.
4. Location of Grooves, False Joints, Holes, Anchorages, and Similar Features: Do not vary from indicated position by more than 1/8 inch on formed surfaces of units and 3/8 inch on unformed surfaces.
2.3 CAST-STONE MATERIALS
A. Portland Cement: ASTM C 150/C 150M, Type I or Type III, containing not more than 0.60 percent total alkali when tested according to ASTM C 114. Provide natural color or white cement as required to produce cast-stone color indicated.
B. Coarse Aggregates: Granite, quartz, or limestone complying with ASTM C 33/C 33M; gradation and colors as needed to produce required cast-stone textures and colors.
C. Fine Aggregates: Natural sand or crushed stone complying with ASTM C 33/C 33M, gradation and colors as needed to produce required cast-stone textures and colors.
D. Color Pigment: ASTM C 979/C 979M, synthetic mineral-oxide pigments or colored water-reducing admixtures; color stable, free of carbon black, nonfading, and resistant to lime and other alkalis.
2.4 MORTAR MATERIALS
A. Portland Cement: ASTM C 150/C 150M, Type I or II. Provide natural color or white cement as required to produce mortar color indicated.
B. Hydrated Lime: ASTM C 207, Type S.
C. Portland Cement-Lime Mix: Packaged blend of portland cement and hydrated lime containing no other ingredients.
D. Masonry Cement: ASTM C 91/C 91M.
E. Mortar Pigments: Natural and synthetic iron oxides and chromium oxides, compounded for use in mortar mixes and complying with ASTM C 979/C 979M. Use only pigments with a record of satisfactory performance in masonry mortar.
F. Aggregate for Mortar: ASTM C 144.
1. For mortar that is exposed to view, use washed aggregate consisting of natural sand or crushed stone.
2. For joints less than 1/4 inch thick, use aggregate graded with 100 percent passing the No. 16 (1.18-mm) sieve.
3. White-Mortar Aggregates: Natural white sand or crushed white stone.
4. Colored Aggregates: Natural sand or crushed stone of color necessary to produce required mortar color.
G. Water: Potable.
2.5 TIES AND ANCHORS
A. General: Provide anchors that allow vertical adjustment but resist tension and compression forces perpendicular to plane of wall, for attachment to backup wall and as follows:
1. Structural Performance Characteristics: Capable of withstanding a 100-lbf load in both tension and compression without deforming or developing play in excess of 0.05 inch.
2. Tie and Anchors: Provide anchoring systems ties that comply with ACI 530.1/ASCE 6.
3. Material: ASTM A 167 or ASTM A 240/A 240M sheet metal galvanized to comply with ASTM A 653/A 653M, G60 coating.
B. Materials: Provide ties and anchors specified in this article that are made from materials that comply with the following unless otherwise indicated:
1. Hot-Dip Galvanized, Carbon-Steel Wire: ASTM A 82/A 82M; with ASTM A 153/A 153M, Class B-2 coating.
C. Substrate Anchors
1. Manufacturers: The basis of design products indicated are from Hohmann & Barnard, Inc. Provide product indicated or a comparable product by one of the following manufacturers:
a. Dayton Superior Corporation, Dur-O-Wal Division
b. Heckmann Building Products, Inc.
2. Stone Veneer Anchor with Masonry Backup Wall:
a. Basis of Design: "Hook and Eye Tie System #270 - 2X" in size as required to comply with required joint embed criteria.
D. Proprietary Acidic Cleaner: Manufacturer's recommended cleaner designed for removing mortar/grout stains, efflorescence, and other new construction stains from new masonry without discoloring or damaging masonry surfaces. Use product expressly approved for intended use by cast-stone manufacturer and expressly approved by cleaner manufacturer for use on cast stone and adjacent masonry materials.
2.6 MORTAR MIXES
A. Do not use admixtures including pigments, air-entraining agents, accelerators, retarders, water-repellent agents, antifreeze compounds, or other admixtures unless otherwise indicated.
1. Do not use calcium chloride in mortar or grout.
2. Use masonry cement or mortar cement mortar unless otherwise indicated.
B. Comply with ASTM C 270, Proportion Specification, Type N.
C. Pigmented Mortar: Use colored cement product or select and proportion pigments with other ingredients to produce color required. Do not add pigments to colored cement products.
1. Pigments shall not exceed 10 percent of portland cement by weight.
2. Mix to match Architect's sample.
3. Application: Use pigmented mortar for exposed mortar joints.
D. Colored-Aggregate Mortar: Produce required mortar color by using colored aggregates and natural color or white cement as necessary to produce required mortar color.
1. Mix to match Architect's sample.
2. Application: Use colored-aggregate mortar for exposed mortar joints.
2.7 SOURCE QUALITY CONTROL
A. Engage a qualified independent testing agency to sample and test cast-stone units according to ASTM C 1364.
1. Include one test for resistance to freezing and thawing.
PART 1 - EXECUTION
3.1 EXAMINATION
A. Examine substrates and conditions, with Installer present, for compliance with requirements for installation tolerances and other conditions affecting performance of the Work.
B. Proceed with installation only after unsatisfactory conditions have been corrected.
3.2 ANCHORING STONE VENEERS
A. Anchor stone veneers to backup wall with veneer anchors to provide not less than 1 inch of air space and comply with the following requirements:
1. Masonry Wall Backup: Fasten screw-attached anchors to masonry or concrete with metal fasteners of type indicated where embed tie installation is not possible.
2. Masonry Wall Backup: Embed tie sections in masonry joints.
3. Locate anchor sections to allow maximum vertical differential movement of ties up and down.
4. Space anchors as indicated, but not more than 16 inches o.c. vertically and 24 inches o.c. horizontally, with not less than 1 anchor for each 2.67 sq. ft. of wall area. Install additional anchors within 12 inches of openings and at intervals, not exceeding 8 inches, around perimeter.
3.3 SETTING CAST STONE IN MORTAR
A. Set cast stone as indicated on drawings. Set units accurately in locations indicated, with edges and faces aligned according to established relationships and indicated tolerances.
1. Install anchors, supports, fasteners, and other attachments indicated or necessary to secure units in place.
2. Coordinate installation of cast stone with installation of flashing specified in other Sections.
B. Wet joint surfaces thoroughly before applying mortar or setting in mortar.
C. Set units in full bed of mortar with full head joints unless otherwise indicated.
1. Set units with joints 3/8 inch wide unless otherwise indicated.
2. Build anchors and ties into mortar joints as units are set.
3. Fill dowel holes and anchor slots with mortar.
4. Fill collar joints solid as units are set.
5. Build concealed flashing into mortar joints as units are set.
6. Keep head joints in copings and between other units with exposed horizontal surfaces open to receive sealant.
7. Keep joints at shelf angles open to receive sealant.
D. Rake out joints for pointing with mortar to depths of not less than 3/4 inch. Rake joints to uniform depths with square bottoms and clean sides. Scrub faces of units to remove excess mortar as joints are raked.
E. Point mortar joints by placing and compacting mortar in layers not greater than 3/8 inch. Compact each layer thoroughly and allow it to become thumbprint hard before applying next layer.
F. Tool exposed joints slightly concave when thumbprint hard. Use a smooth plastic jointer larger than joint thickness.
G. Rake out joints for pointing with sealant to depths of not less than 3/4 inch. Scrub faces of units to remove excess mortar as joints are raked.
H. Point joints with sealant to comply with applicable requirements in Section 079200 "Joint Sealants."
1. Prime cast-stone surfaces to receive sealant and install compressible backer rod in joints before applying sealant unless otherwise indicated.
I. Provide sealant joints at head joints of copings and other horizontal surfaces; at expansion, control, and pressure-relieving joints; and at locations indicated.
1. Keep joints free of mortar and other rigid materials.
2. Build in compressible foam-plastic joint fillers where indicated.
3. Form joint of width indicated, but not less than 3/8 inch.
4. Prime cast-stone surfaces to receive sealant and install compressible backer rod in joints before applying sealant unless otherwise indicated.
5. Prepare and apply sealant of type and at locations indicated to comply with applicable requirements in Section 079200 "Joint Sealants."
J. Cover wall each day after installation to keep open walls protected and dry.
END OF SECTION 04 72 00

SECTION 06 10 00 - ROUGH CARPENTRY
PART 1 - GENERAL
1.1 RELATED DOCUMENTS

A. The provisions of the General Conditions, Supplementary Conditions, Drawings, Specifications, and the Sections included under Division 1, General Requirements and References are included as a part of this Section as though bound herein.
1.2 SUMMARY

A. Section Includes:

1. Provide labor, material, services, and equipment necessary to furnish and install work as indicated and as specified herein, which includes, but is not limited to:
a. Miscellaneous blocking, grounds, and nailers.
b. Equipment Plywood Backing Panels.
1.3 REFERENCES

A. ALSC (American Lumber Standards Committee) - Softwood Lumber Standards.
B. EWA (The Engineered Wood Association).
C. APA (American Plywood Association).
D. AWPA U1 - Use Category System - User Specification for Treated Wood.
E. AWPA P5 - Standard for Waterborne Preservatives.
F. AFPA (American Forest and Paper Association).
G. ANSI/APA (American National Standards Institute/American Plywood Association).
H. MFMA (Metal Framing Manufacturer's Association) - Guidelines for the Use of Metal Framing.
I. HPVA HP-1 - Hardwood Plywood and Veneer Association.
J. ASTM A563 - Standard Specification for Carbon and Alloy Steel Nuts.
K. ASTM B633 - Standard Specification for Electrodeposited Coatings of Zinc on Iron and Steel.
L. ASTM C645 - Standard Specification for Nonstructural Steel Framing Members.
M. ASTM C653/C653M - Standard Specification for Steel Sheet, Zinc-Coated (Galvanized) or Zinc-Iron Alloy-Coated (Galvannealed) by the Hot-Dip Process.
N. ASTM C954 - Standard Specification for Steel Drill Screws for the Application of Gypsum Panel Products or Metal Plaster Bases to Steel Studs from 0.033 in. (0.84 mm) to 0.112 in. (2.84 mm) in Thickness.
O. ASTM D226 - Standard Specification for Asphalt-Saturated Organic Felt Used in Roofing and Waterproofing.
P. ASTM F593 - Standard Specification for Stainless Steel Bolts, Hex Cap Screws, and Studs.
Q. ASTM F594 - Standard Specification for Stainless Steel Nuts.
R. ICC-ES Standards.
S. ASME American Society of Mechanical Engineers.
T. Voluntary Product Standards PS-20 and PS-1.
U. Grading rules of Southern Pine.
1.4 DEFINITIONS

A. Rough carpentry includes carpentry work not specified as part of other Sections and generally not exposed, unless otherwise specified.
1.5 ACTION SUBMITTALS

A. Product Data: For each type of process and factory-fabricated product. Indicate component materials and dimensions and include construction and application details.

1. Include data for wood-preservative treatment from chemical treatment manufacturer and certification by treating plant that treated materials comply with requirements. Indicate type of preservative used and net amount of preservative retained.
1.6 INFORMATION SUBMITTALS

A. Material Certificates: For dimension lumber specified to comply with minimum allowable unit stresses. Indicate species and grade selected for each use and design values approved by the ALSC Board of Review.

B. Evaluation Reports: For the following, from ICC-ES:

1. Wood-preservative-treated wood.
1.7 QUALITY ASSURANCE

A. Testing Agency Qualifications: For testing agency providing classification marking for treated material, an inspection agency acceptable to authorities having jurisdiction that periodically performs inspections to verify that the material bearing the classification marking is representative of the material tested.
1.8 FIELD CONDITIONS

A. Examine substrates and supporting structure and the conditions under which work is to be installed. Do not proceed with the installation until unsatisfactory conditions have been corrected.
1.9 DELIVERY, STORAGE, AND HANDLING

A. Stack wood products flat with spacers beneath and between each bundle to provide air circulation. Protect wood products from weather by covering with waterproof sheeting, securely anchored. Provide for air circulation around stacks and under coverings.

1. For lumber and plywood pressure treated with waterborne chemicals, place spacers between each bundle to provide air circulation.
2. Keep treated wood waste separated from other wood to be recycled or reused as mulch. Discard in a legal manor.
PART 2 - PRODUCTS
2.1 WOOD GROUNDS, NAILERS AND BLOCKING

A. General: Provide miscellaneous lumber indicated and lumber for support or attachment of other construction, including blocking, nailers, and similar items.

B. Lumber for blocking may be any grade and classified standard and better for western species or classified No. 2 for Southern Pine SPIB. Plywood shall not be used for blocking materials.

C. For blocking and nailers used for attachment of other construction, select and cut lumber to eliminate knots and other defects that will interfere with attachment of other work.

D. Wood grounds, nailers, and sleepers shall be pressure treated as specified herein. The manufacturer and applicator of pressure treatment shall mark all wood.
2.2 EQUIPMENT PLYWOOD BACKING PANELS

A. Equipment Backing Panels: Comply with PS 1 "U.S. Product Standard for Construction and Industrial Plywood" for plywood construction panels and, for products not manufactured under PS 1 provisions, with APA PRP-108 trademark. Furnish construction panels that are each factory-marked with APA trademark.
1. Panels: Paint exterior AC plywood 3/4" thick with fire retardant paint "Firefree Class A" as manufactured by Firefree Coatings, Inc.
2.3 FASTENERS

A. Provide fasteners of size and type indicated that comply with requirements specified in this article for material and manufacture.

B. Nails, Wire, Brads, and Staples: FS FF-N-105.

C. Power Driven Fasteners: National Evaluation Report NER-272.
D. Screws for Fastening to Metal Framing: ASTM C 954, except with wafer heads and reamer wins, length as recommended by screw manufacturer for material being fastened.
E. Lag Bolts: ASME B18.2.1 (ASME B18.2.3.8M).
F. Bolts: Steel bolts complying with ASTM A 307, Grade A (ASTM F 568M, Property Class 4.6); with ASTM A 563 (ASTM A 563M) hex nuts and, where indicated, flat washers.
G. Expansion Anchors: Anchor bolt and sleeve assembly of material indicated below with capability to sustain, without failure, a load equal to 6 times the load imposed when installed in unit masonry assemblies and equal to 4 times the load imposed when installed in concrete as determined by testing per ASTM E 488 conducted by a qualified independent testing and inspecting agency.
1. Material: Carbon-steel components, zinc plated to comply with ASTM B 633, Class Fe/Zn 5.

H. Treated Wood: Provide stainless steel fasteners of a type and size required for attachment.
2.4 PRESERVATIVE WOOD TREATMENT BY PRESSURE PROCESS

A. Where lumber or plywood is indicated as preservative-treated wood or is specified herein to be treated, comply with applicable requirements of AWPA Standards C2 (Lumber) and C9 (Plywood). Mark each treated item with the AWPB or SPIB Quality Mark Requirements.

B. Preservative Treatment by Pressure Process: AWPA U1; Use Category UC2 for interior construction not in contact with the ground, Use Category UC3b for exterior construction not in contact with the ground, and Use Category UC4a for items in contact with the ground.

C. Pressure-treat above-ground items with water-borne preservatives to a minimum retention of 0.25 pcf. For interior uses, after treatment, kiln-dry lumber and plywood to a maximum moisture content, respectively, of 19 percent and 15 percent. Treat indicated items and the following:

1. Wood nailers, curbs, equipment support bases, blocking, stripping, and similar members in connection with roofing, flashing, vapor barriers, and waterproofing.
2. Wood sills, sleepers, blocking, furring, stripping, and similar concealed members in contact with masonry or concrete.
3. Wood framing members less than 18 inches above grade.
4. Wood floor plates installed over concrete slabs directly in contact with earth.

D. Pressure-treat wood members in contact with the ground or fresh water with water-borne preservatives to a minimum retention of 0.40 pcf.

E. Complete fabrication of treated items prior to treatment, where possible. If cut after treatment, coat cut surfaces to comply with AWPA M4. Inspect each piece of lumber or plywood after drying and discard damaged or defective pieces.
PART 3 - EXECUTION
3.1 INSTALLATION, GENERAL

A. Discard units of material with defects that impair quality of construction and that are too small to use in fabricating rough carpentry with minimum joints or optimum joint arrangement.

B. Set rough carpentry to required levels and lines, with members plumb and true to line and cut and fitted.

C. Fit rough carpentry to other construction; scribe and cope as required for accurate fit. Coordinate location of furring, nailers, blocking, grounds, and similar supports to allow attachment of other construction.

D. Securely attach rough carpentry work to substrate by anchoring and fastening as indicated.

E. Use screws, unless otherwise indicated. Select fasteners of size that will not penetrate members where opposite side will be exposed to view or will receive finish materials. Make tight connections between members. Install fasteners without splitting of wood; pre-drill as required.
3.2 BLOCKING GROUNDS AND NAILERS

A. Install blocking, grounds and nailers where shown and where required for screeding or attachment of other work. Form to shapes as shown and cut as required for true line and level of work to be attached. Coordinate location with other Work involved.

B. Attach to substrates as required to support applied loading. Countersink bolts and nuts flush with surfaces, unless otherwise indicated. Build into masonry during installation of masonry work. Where possible, anchor to formwork before concrete placement.

C. Install permanent grounds of dressed, preservative treated, key-beveled lumber not less than 1-1/2 inches wide and of thickness required to bring face of ground to exact thickness of finish material involved. Remove temporary grounds when no longer required.

END OF SECTION 06 10 00

SECTION 06 16 00 - SHEATHING
PART 2 - PRODUCTS
2.1 MANUFACTURER

A. Manufacturers are as indicated however products of other manufacturers will be considered for acceptance provided they equal or exceed the material requirements and functional qualities of the specified product and acceptance is provided by the Architect in writing prior to bidding.
2.2 GENERAL

A. Thickness: As needed to comply with requirements specified, but not less than thickness indicated.

B. Factory mark panels to indicate compliance with applicable standard.
2.3 WALL GLASS-MAT GYPSUM SHEATHING

A. Basis of Design: "DensGlas Sheathing Type X" as manufactured by Georgia Pacific Gypsum, LLC.

B. The following manufacturers are acceptable provided they equal or exceed the material requirements and functional qualities of the basis of design product.

1. National Gypsum Company
2. CertainTeed Corporation

C. Fiberglass-Mat Faced Gypsum Sheathing: Comply with ASTM C1117/117M, Type X.

1. Thickness: 5/8 inch
2. Width: 4 feet
3. Length: 8 feet
4. Edges: Square
5. Surfacing: Fiberglass mat on face, back, and long edges.
PART 3 - EXECUTION
3.1 INSTALLATION, GENERAL

A. Do not use materials with defects that impair quality of sheathing or pieces that are too small to use with minimum number of joints or optimum joint arrangement. Arrange joints so that pieces do not span between fewer than three support members.

B. Cut panels at penetrations, edges, and other obstructions of work; fit tightly against abutting construction unless otherwise indicated.

C. Securely attach to substrate by fastening as indicated, complying with applicable building codes.

D. Select fasteners of size that will not fully penetrate members where opposite side will be exposed to view or will receive finish materials. Make tight connections. Install fasteners without splitting wood.
E. Coordinate wall and parapet sheathing installation with flashing and joint-sealant installation so these materials are installed in sequence and manner that prevent exterior moisture from passing through completed assembly.

F. Do not bridge building expansion joints; cut and space edges of panels to match spacing of structural support elements.

G. Coordinate sheathing installation with installation of materials installed over sheathing so sheathing is not exposed to precipitation or left exposed at end of the workday when rain is forecast.
3.2 GYPSUM SHEATHING INSTALLATION

A. Comply with GA-253 and with manufacturer's written instructions.

1. Fasten gypsum sheathing to wood framing with nails or screws.
2. Fasten gypsum sheathing to cold-formed metal framing with screws.
3. Install panels with a 3/8-inch gap where non-load-bearing construction abuts structural elements.
4. Install panels with a 1/4-inch gap where they abut masonry or similar materials that might retain moisture, to prevent wicking.

B. Apply fasteners so heads bear tightly against face of sheathing, but do not cut into facing.

C. Vertical Installation: Install vertical edges centered over studs. Abut ends and edges with those of adjacent panels. Attach at perimeter and within field of panel to each stud.

1. Space fasteners approximately 8 inches o.c. and set back a minimum of 3/8 inch from edges and ends of panels.
2. For sheathing under stucco cladding, panels may be initially tacked in place with screws if overlying self-furring metal lath is screw-attached through sheathing to studs immediately after sheathing is installed.

D. Seal sheathing joints according to sheathing manufacturer's written instructions.

1. Apply elastomeric sealant to joints and fasteners and trowel flat. Apply sufficient amount of sealant to completely cover joints and fasteners after troweling. Seal other penetrations and openings.
2. Apply glass-fiber sheathing tape to glass-mat gypsum sheathing joints and apply and trowel sealant to embed entire face of tape in sealant. Apply sealant to exposed fasteners with a trowel so fasteners are completely covered. Seal other penetrations and openings.
3.3 CEMENTITIOUS SHEATHING INSTALLATION

A. Install panels and treat joints according to ANSI A108.11 and manufacturer's written instructions for type of application indicated.

B. Install with 1/4-inch gap where panels abut other construction or penetrations.
3.4 BUILDING PAPER INSTALLATION

A. General: Cover sheathing with weather-resistant sheathing paper as follows:

1. Cut back barrier 1/2 inch on each side of the break in supporting members at expansion- or control-joint locations.
2. Apply barrier to cover vertical flashing with a minimum 4-inch overlap, unless otherwise indicated.

B. Building Paper: Apply horizontally with a 2-inch overlap and a 6-inch end lap; fasten to sheathing with galvanized staples or roofing nails.
3.5 SHEATHING JOINT-AND-PENETRATION TREATMENT

A. Seal sheathing joints according to sheathing manufacturer's written instructions.

B. Apply elastomeric sealant to joints and fasteners and trowel flat. Apply sufficient quantity of sealant to completely cover joints and fasteners after troweling. Seal other penetrations and openings.
END OF SECTION 06 16 00

SECTION 07 11 13 - BITUMINOUS DAMPPROOFING
PART 1 - PRODUCTS
2.1 MANUFACTURERS
A. Manufacturer and basis of design shall be the following however products of other manufacturers will be considered for acceptance provided they equal or exceed the material requirements and functional qualities of the specified product and acceptance is provided by the Architect in writing prior to bidding.
1. Karnak Corp.
B. The following manufacturers are acceptable provided they equal or exceed the material requirements and functional qualities of the basis of design product.
1. W. R. Meadows, Inc.
2. Lambert Corp.
3. BASF
2.2 DAMPPROOFING
A. Basis of Design: "#220 Fibered Emulsion Dampproofing"
2.3 MATERIAL
A. Fibered Brush and Spray Coats: Semi-mastic, fiber-reinforced, asphalt-emulsion damp-proofing for brush or spray application. Material shall be asbestos-free. ASTM D 1227, Type II, Class 1 and ASTM D1187, Type I.
2.4 AUXILIARY MATERIALS
A. General: Furnish auxiliary materials recommended in writing by dampproofing manufacturer for intended use and compatible with bituminous dampproofing.
B. Emulsified-Asphalt Primer: ASTM D 1227, Type III, Class 1, except diluted with water as recommended in writing by manufacturer.
PART 3 - EXECUTION
3.1 EXAMINATION
A. Examine substrates, areas, and conditions, with Installer present, for compliance with requirements and other conditions affecting performance of the Work.
B. Verify that concrete has cured and aged for minimum time period recommended in writing by dampproofing manufacturer.
C. Verify that substrate is visibly dry and within the moisture limits recommended in writing by manufacturer. Test for capillary moisture by plastic sheet method according to ASTM D 4263.
D. Proceed with installation only after unsatisfactory conditions have been corrected.
3.2 PREPARATION
A. Clean, prepare, and treat substrates according to manufacturer's written instructions. Provide clean, dust-free, and dry substrates for proofing application.
B. Remove grease, oil, bitumen, form-release agents, paints, curing compounds, acid residues, and other penetrating contaminants or film-forming coatings from concrete.
C. Remove fins, ridges, and other projections, and fill honeycomb, aggregate pockets, holes, and other voids.
D. Patch holes and voids with recommended patch material as recommended by manufacturer.
E. Masonry unit surfaces to be treated shall be cleaned free of excess mortar, laitance, all loose particles and foreign material. Spots, efflorescence (mineral salt), and stains shall be removed using a 10% solution of muriatic acid. Oil and grease shall be removed with a suitable caustic solution or cleaning compound. After cleaning, surface shall be washed thoroughly with water to remove all traces of acid or cleaning solutions. All open joints, cracks larger than hairline, and holes shall be pointed with a suitable material matching surface.
3.3 JOINT AND CRACK TREATMENT
A. Prepare, treat, rout, and fill joints and cracks in substrate according to dampproofing manufacturer's written instructions and to recommendations in ASTM C 898/C 898M. Before coating surfaces, remove dust and dirt from joints and cracks according to ASTM D 4258.
1. Comply with ASTM C 1193 for joint-sealant installation.
3.4 DAMPPROOFING INSTALLATION
A. Apply materials in strict accordance with manufacturer's printed instructions. Do not dilute or otherwise change material from the original factory prepared solution. Material may be brush or spray-applied.
B. Apply thickness of wet material as recommended by manufacturer using as many coats as necessary. Touch-up or re-coat any thin areas, pinholes, or breaks in material application.
C. Dampproofing shall be continuous and monolithic to provide a continuous plane of protection and to patch voids.
D. Apply additional coats if recommended in writing by manufacturer or to achieve a smooth surface and uninterrupted coverage.
E. Areas of the wall subject to extreme stress or movement shall be reinforced with a layer of fiber glass fabric embedded in the first coat prior to application of the second coat. Overlap all edges a minimum of 3" to form a continuous membrane reinforcement. Do not extend membrane across expansion joints.
F. Where dampproofing footings and foundation walls, apply from finished-grade line to top of footing; extend over top of footing and down a minimum of 6 inches over outside face of footing.
1. Extend dampproofing 12 inches onto intersecting walls and footings, but do not extend onto surfaces exposed to view when project is completed.
2. Install flashings and corner protection stripping at internal and external corners, changes in plane, construction joints, cracks, and where indicated as "reinforced," by embedding an 8-inch wide strip of asphalt-coated glass fabric in a heavy coat of dampproofing coat for embedding fabric is in addition to other coats.

END OF SECTION 07 11 13

SECTION 07 21 00 - THERMAL INSULATION
PART I - GENERAL
1.1 SUMMARY

A. Section Includes:

1. Provide labor, material, services, and equipment necessary to furnish and install work as indicated and as specified herein, which includes, but is not limited to:
a. Polyisocyanurate foam-plastic board.
b. Glass-fiber batt.
c. Exterior CMU cell Foam.
PART 2 - PRODUCTS
2.1 MANUFACTURER
A. Manufacturer shall be one of the following in each category however products of other manufacturers will be considered for acceptance provided they equal or exceed the material requirements and functional qualities of the specified product and acceptance is provided by the Architect in writing prior to bidding.
1. Tailored Chemical Products
2. CertainTeed Corporation
3. Johns Manville
4. Owens Corning
5. Knauf Insulation
6. Dow Chemical Co.
7. Atlas Roofing Corp.
2.2 POLYISOCYANURATE FOAM-PLASTIC BOARD
A. Basis of Design: "CGF Pro" as manufactured by Atlas Roofing Corp.
B. Glass-Mat-Faced Faced, Polyisocyanurate Board Insulation: ASTM C 1289, Type II, Class 1, with maximum flame-spread and smoke-developed indexes of 25 and 450, respectively, per ASTM E 84, Class A.
1. Minimum R-Value: R-20
2. Thickness: Total thickness shall be 3.5" and as indicated on drawings.
2.3 GLASS-FIBER BATT
A. Unfaced Glass-Fiber Batt: Unfaced, ASTM C665, Type I, with maximum flame-spread of 25 and smoke-developed indexes of 50, respectively, per ASTM E 84.
1. Thickness: Total thickness shall be 6" and as indicated on drawings.
B. Kraft Faced Glass-Fiber Batt: Kraft faced, ASTM C665, Type II, Class C (faced surface not rated for flame propagation).
1. Thickness: Total thickness shall be 3 1/2" and as indicated on drawings.
C. Foil Faced Glass-Fiber Batt: Foil faced, ASTM C665, Type III, Class A, with maximum flame-spread of 25 and smoke-developed indexes of 50, respectively, per ASTM E 84.
1. Thickness: Total thickness shall be 6" and as indicated on drawings.
2. Exposed Applications: Provide where exposed in ceiling cavities.

2.4 Exterior CMU Wall Cell Foam

A. Core-Fill 500 as manufactured by Tailored Chemical Corporation
END OF SECTION 07 21 00

HARVARD ● JOLLY
ARCHITECTURE
1639 Hendry St. Fort Myers Florida 33901 | 561-478-4457 | www.HarvardJolly.com | AAC000119

ESTERO ON THE RIVER
RESTROOM FACILITY
ESTERO ,FLORIDA
CONSTRUCTION DOCUMENTS

Comm. No: 22031.01
Date: 09/08/2023
Drawn: BKL

Revisions

No.	Date	Note

TO THE BEST OF MY KNOWLEDGE, THE PLANS AND SPECIFICATIONS COMPLY WITH THE MINIMUM BUILDING CODES.

Architect of Record
License #

SPECIFICATIONS

A-701

SECTION 07 41 13 - STANDING-SEAM METAL ROOF PANELS

2.1 MANUFACTURERS

A. Manufacturer and basis of design shall be the following however products of other manufacturers will be considered for acceptance provided they equal or exceed the material requirements and functional qualities of the specified product and acceptance is provided by the Architect in writing prior to bidding.

1. Peterson

B. The following manufacturers are acceptable provided they equal or exceed the material requirements and functional qualities of the basis of design product.

1. Imetco
2. Bemo USA
3. Fabral/Allan Building Products

2.2 STANDING-SEAM METAL ROOF PANELS

A. Basis of Design: "Snap-Clad Panel"

B. General: Provide factory-formed metal roof panels designed to be installed by lapping and interconnecting raised side edges of adjacent panels with joint type indicated and mechanically attaching panels to supports using concealed clips inside laps. Include clips, cleats, pressure plates, and accessories required for weathertight installation.

C. Vertical-Rib, Standing-Seam Metal Roof Panels: Formed with vertical ribs at panel edges and a pan between ribs; designed for sequential installation by mechanically attaching panels to supports using concealed clips located under one side of panels, engaging opposite edge of adjacent panels, and seaming panels together.

1. Material: Metallic-Coated Steel Sheet: Aluminum-zinc alloy-coated steel sheet complying with ASTM A 792/A 792M, Class AZ50 (Class AZM150) coating designation; structural quality. Pre-painted by the coil-coating process to comply with ASTM A 755/A 755M.
2. Clips: Per product approval.
3. Joint Type: Snap joint.
4. Panel Coverage: 18" wide.
5. Panel configuration: Flat.
6. Panel Height: 1 3/4" high ribs.

2.3 UNDERLAYMENT MATERIALS

A. Self-Adhering, High-Temperature Underlayment: Provide self-adhering, cold-applied, sheet underlayment, a minimum of 40 mils thick, consisting of slip-resistant, polyethylene-film top surface laminated to a layer of butyl or SBS-modified asphalt adhesive, with release-paper backing. Provide primer when recommended by underlayment manufacturer.

1. Thermal Stability: Stable after testing at 240 deg F; ASTM D 1970.
2. Low-Temperature Flexibility: Passes after testing at minus 20 deg F; ASTM D 1970.
3. Manufacturer is as indicated however equal or better performing products of other manufacturers will be considered for acceptance by the Architect.

a. Carlisle Construction Materials
b. W.R. Meadows
c. W. R. Grace

2.4 MISCELLANEOUS MATERIALS

A. Panel Accessories: Provide components required for a complete, weathertight panel system including trim, copings, fasciae, mullions, sills, corner units, clips, flashings, sealants, gaskets, fillers, closure strips, and similar items. Match material and finish of metal panels unless otherwise indicated.

1. Closures: Provide closures at eaves and ridges, fabricated of same metal as metal panels.
2. Backing Plates: Provide metal backing plates at panel end splices, fabricated from material recommended by manufacturer.
3. Closure Strips: Closed-cell, expanded, cellular, rubber or crosslinked, polyolefin-foam or closed-cell laminated polyethylene; minimum 1-inch thick, flexible closure strips; cut or pre-molded to match metal panel profile. Provide closure strips where indicated or necessary to ensure weathertight construction.

B. Flashing and Trim: Provide flashing and trim formed from same material as metal panels as required to seal against weather and to provide finished appearance. Locations include, but are not limited to, eaves, rakes, corners, bases, framed openings, ridges, fasciae, and fillers. Finish flashing and trim with same finish system as adjacent metal panels.

C. Panel Fasteners: Zinc-coated steel, corrosion resisting steel, zinc cast head, or nylon capped steel, type and size as approved for the applicable loading requirements. Exposed fasteners, where approved by architect, shall be gasketed or have gasketed washers on the exterior side of the covering to waterproof the penetration.

D. Panel Sealants: Provide sealant type recommended by manufacturer that are compatible with panel materials, are non-staining, and do not damage panel finish.

1. Sealant Tape: Pressure-sensitive, 100 percent solids, gray polyisobutylene compound sealant tape with release-paper backing. Provide permanently elastic, nonsag, nontoxic, non-staining tape 1/2 inch wide and 1/8 inch thick.
2. Joint Sealant: ASTM C 920; elastomeric polyurethane or silicone sealant; of type, grade, class, and use classifications required to seal joints in metal panels and remain weathertight; and as recommended in writing by metal panel manufacturer.
3. Butyl-Rubber-Based, Solvent-Release Sealant: ASTM C 1311.

2.5 NAILABLE INSULATION

A. Insulation: Provide "AC Foam CrossVent Nailable Vented Insulation" as manufactured by Atlas Roofing Corporation. Comply with ASTM 1289, Type V, Class 1.

B. Closed-cell HCFC FREE "Green" polyisocyanurate foam core manufactured using HCFC or ACUltra Hydrocarbon blowing agent with 25 psi density and integrally laminated to heavy non-asphaltic fiber-reinforced felt facer and 19/32" CDX plywood with 1" cross ventilation air space.

C. R-Value: R-value shall be a minimum R-20 and as indicated on drawings.

D. Provide tapers and crickets of the same material as indicated on the drawings and as required to provide proper slope.

2.6 FABRICATION

A. General: Fabricate and finish metal panels and accessories at the factory, by manufacturer's standard procedures and processes, as necessary to fulfill indicated performance requirements demonstrated by laboratory testing. Comply with indicated profiles and with dimensional and structural requirements.

B. On-Site Fabrication: Subject to compliance with requirements of this Section, metal panels may be fabricated on-site using factory set, non-adjustable portable roll-forming equipment if panels are of same profile and warranted by manufacturer to be equal to factory-formed panels. Fabricate according to equipment manufacturer's written instructions and to comply with details shown.

C. Provide panel profile, including major ribs and intermediate stiffening ribs, if any, for full length of panel.

D. Fabricate metal panel joints with factory-installed captive gaskets or separator strips that provide a weathertight seal and prevent metal-to-metal contact, and that minimize noise from movements.

E. Sheet Metal Flashing and Trim: Fabricate flashing and trim to comply with manufacturer's recommendations and recommendations in SMACNA's "Architectural Sheet Metal Manual" that apply to design, dimensions, metal, and other characteristics of item indicated.

1. Form exposed sheet metal accessories that are without excessive oil canning, buckling, and tool marks and that are true to line and levels indicated, with exposed edges folded back to form hems.
2. Sealed Joints: Form non-expansion, but movable, joints in metal to accommodate sealant and to comply with SMACNA standards.
3. Fabricate cleats and attachment devices from same material as accessory being anchored or from compatible, noncorrosive metal recommended in writing by metal panel manufacturer.

a. Size: As recommended by SMACNA's "Architectural Sheet Metal Manual" or metal panel manufacturer for application, but not less than thickness of metal being secured.

2.7 FINISHES

A. Comply with NAAMM's "Metal Finishes Manual for Architectural and Metal Products" for recommendations for applying and designating finishes. Sections shall be free of scratches and other serious surface blemishes and chemically cleaned.

B. High-Performance Organic Finish Three-Coat Fluoropolymer: Chemical Finish Organic Coating, thermocured system consisting of specially formulated inhibitive primer and fluoropolymer color topcoat containing not less than 70 percent polyvinylidene fluoride resin by weight. Complying with paint manufacturer's written instructions for cleaning, preparing, pretreating and apply coating to exposed metal surfaces to comply with AAMA 2605.

1. Color and Gloss: As selected by Architect from full range of industry colors and color densities and custom colors.

C. Concealed Finish: Apply pretreatment and manufacturer's standard white or light-colored acrylic or polyester backer finish consisting of prime coat and wash coat with a minimum total dry film thickness of 0.5 mil.

PART 1 - EXECUTION

3.1 EXAMINATION

A. Examine substrates, areas, and conditions, with Installer present, for compliance with requirements for installation tolerances, metal panel supports, and other conditions affecting performance of the Work.

B. Verify that deck is structurally sound to support installers, materials and equipment without damaging or deforming work.

1. Examine solid roof sheathing to verify that sheathing joints are supported by framing or blocking and that installation is within flatness tolerances required by metal roof panel manufacturer.

a. Verify that air- or water-resistive barriers have been installed over sheathing or backing substrate to prevent air infiltration or water penetration.

C. Examine roughing-in for components and systems penetrating metal panels to verify actual locations of penetrations relative to seam locations of metal panels before installation.

D. Verify that roof drains, scuppers, roof curbs, nailers, equipment supports, vents and other roof accessories are secured properly and installed in conformance with Contract Drawings and submittals.

E. Examine roof deck for suitability to receive insulation. Verify that substrate is dry, clean and free of foreign material that will damage insulation or impede installation.

F. Proceed with installation only after unsatisfactory conditions have been corrected.

3.2 PREPARATION

A. Miscellaneous Supports: Install sub-framing, furring, and other miscellaneous panel support members and anchorages according to ASTM C 754 and metal panel manufacturer's written recommendations.

3.3 INSULATION INSTALLATION

A. Install specified insulation using approved method in accordance with manufacturer's latest written instructions and as required by governing codes.

B. Install with end joints staggered to avoid having insulation joints coinciding with joints in deck. In multi-layer installations, stagger joints in top and bottom layers.

3.4 UNDERLAYMENT INSTALLATION

A. Self-Adhering Sheet Underlayment: Apply primer if required by manufacturer. Comply with temperature restrictions of underlayment manufacturer for installation. Apply at locations indicated below on Drawings, wrinkle free, in shingle fashion to shed water, and with end laps of not less than 6 inches staggered 24 inches between courses. Overlap side edges not less than 6 inches. Roll laps with roller. Cover underlayment within 14 days.

1. Apply over the entire roof surface.

B. Flashings: Install flashings to cover underlayment to comply with requirements specified in Specification Section "Sheet Metal Flashing and Trim."

3.5 METAL PANEL INSTALLATION

A. General: Install metal panels according to manufacturer's written instructions in orientation, sizes, and locations indicated. Install panels perpendicular to supports unless otherwise indicated. Anchor metal panels and other components of the Work securely in place, with provisions for thermal and structural movement.

1. Shim or otherwise plumb substrates receiving metal panels.
2. Flash and seal metal panels at perimeter of all openings. Fasten with self-tapping screws. Do not begin installation until air- or water-resistive barriers and flashings that will be concealed by metal panels are installed.
3. Install screw fasteners in predrilled holes.
4. Locate and space fastenings in uniform vertical and horizontal alignment.
5. Install flashing and trim as metal panel work proceeds.
6. Locate panel splices over, but not attached to, structural supports. Stagger panel splices and end laps to avoid a four-panel lap splice condition.
7. Align bottoms of metal panels and fasten with blind rivets, bolts, or self-tapping screws. Fasten flashings and trim around openings and similar elements with self-tapping screws.
8. Provide weathertight escutcheons for pipe- and conduit-penetrating panels.

B. Anchor Clips: Anchor metal roof panels and other components of the Work securely in place, using manufacturer's approved fasteners according to manufacturers' written instructions.

C. Metal Protection: Where dissimilar metals contact each other or corrosive substrates, protect against galvanic action as recommended in writing by metal panel manufacturer.

D. Standing-Seam Metal Roof Panel Installation: Fasten metal roof panels to supports with concealed clips at each standing-seam joint at location, spacing, and with fasteners recommended in writing by manufacturer.

1. Install clips to supports with self-tapping fasteners.
2. Install pressure plates (if required) at locations indicated in manufacturer's written installation instructions.
3. Snap Joint: Nest standing seams and fasten together by interlocking and completely engaging factory-applied vinyl weatherseal.

E. Accessory Installation: Install accessories with positive anchorage to building and weathertight mounting and provide for thermal expansion. Coordinate installation with flashings and other components.

1. Install components required for a complete metal panel system including trim, copings, corners, seam covers, flashings, sealants, gaskets, fillers, closure strips, and similar items. Provide types indicated by metal roof panel manufacturers; or, if not indicated, types recommended by metal roof panel manufacturer.

F. Flashing and Trim: Comply with performance requirements, manufacturer's written installation instructions, and SMACNA's "Architectural Sheet Metal Manual." Provide concealed fasteners where possible and set units true to line and level as indicated. Install work with laps, joints, and seams that will be permanently watertight and weather resistant.

1. Install exposed flashing and trim that is without buckling and tool marks, and that is true to line and levels indicated, with exposed edges folded back to form hems. Install sheet metal flashing and trim to fit substrates and achieve waterproof and weather-resistant performance.
2. Expansion Provisions: Provide for thermal expansion of exposed flashing and trim. Space movement joints at a maximum of 10 feet with no joints allowed within 24 inches (610 mm) of corner or intersection. Where lapped expansion provisions cannot be used or would not be sufficiently weather resistant and waterproof, form expansion joints of intermeshing hooked flanges, not less than 1 inch deep, filled with mastic sealant (concealed within joints).

G. Pipe Flashing: Form flashing around pipe penetration and metal roof panels. Fasten and seal to metal roof panels as recommended by manufacturer.

3.6 ERECTION TOLERANCES

A. Installation Tolerances: Shim and align substrate or framing within installed tolerance of 1/4 inch in 20 feet on slope and location lines as indicated and within 1/8-inch offset of adjoining faces and of alignment of matching profiles.

END OF SECTION 07 41 13

SECTION 07 46 46 - CEMENT BOARD SIDING

PART 1 - WARRANTY

1.8 WARRANTY

A. Product Warranty: Limited, non-pro-rated product warranty.
1. HZ30 lap siding for 30 years.
2. HZ10 trim and fascia boards for 15 years.
B. Finish Warranty: Limited product warranty against manufacturing finish defects.
1. When used for its intended purpose, properly installed and maintained according to manufacturer's published installation instructions, for a period of 15 years from the date of purchase: will not peel; will not crack; and will not chip. Finish warranty includes the coverage for labor and material.
C. Workmanship Warranty: Application limited warranty for two (2) years.

PART 2 - PRODUCTS

2.1 MANUFACTURER

A. Manufacturer shall be the following however products of other manufacturers will be considered for acceptance provided they equal or exceed the material requirements and functional qualities of the specified product and acceptance is provided by the Architect in writing prior to bidding.
1. James Hardie Building Products, Inc.

2.2 SIDING

A. Basis of Design: HardiePlank HZ10 lap siding, HardiPanel HZ10 vertical siding, hard trim HZ10 trim and fascia.

2.3 MATERIALS

A. Fiber-cement Siding - complies with ASTM C 1186 Grade II, Type A classified as noncombustible when tested in accordance with ASTM E 136.
B. Fiber-cement Siding - flame-spread index of 0 and a smoke-developed index of 5 when tested in accordance with ASTM E 84.
C. Lap Siding: HZ10 Lap Siding.
1. Type: As selected by the Architect.
2. Size: As selected by the Architect.
3. Texture: As selected by the Architect.
4. Thickness: As selected by the Architect.
C. Trim: HZ10 Boards
1. Type: As selected by the Architect.
2. Size: As selected by the Architect.
3. Texture: As selected by the Architect.
4. Thickness: As selected by the Architect.
D. HZ10 Fascia boards
1. Type: As selected by the Architect.
2. Size: As selected by the Architect.
3. Texture: As selected by the Architect.
4. Thickness: As selected by the Architect.

2.4 FASTENERS

A. Metal Framing: As required to comply with Florida Product Approval.

2.5 FINISHES

A. Factory Primer: Provide factory applied universal primer.
1. Primer: Factory primed by manufacturers standard.
2. Topcoat: Refer to painting specification.
B. Factory Finish: Refer to Exterior Finish Schedule.
1. Product: ColorPlus Technology by James Hardie.
2. Color: As selected by the Architect.

PART 3 - EXECUTION

3.1 PREPARATION

A. Before installing material, examine framing work for completion and complete work as required.

3.2 INSTALLATION

A. Install in accordance with manufacturer's instructions.
B. Install, plumb, level, true, and straight with no distortions. Shim as required using concealed shims.

3.3 INSTALLATION, GENERAL

A. Do not use materials with defects that impair quality of sheathing or pieces that are too small to use with minimum number of joints or optimum joint arrangement. Arrange joints so that pieces do not span between fewer than three support members.
B. Cut panels at penetrations, edges, and other obstructions of work; fit tightly against abutting construction unless otherwise indicated.
C. Select fasteners of size that will not fully penetrate members where opposite side will be exposed to view or will receive finish materials. Make tight connections. Install fasteners without splitting wood.
D. Do not bridge building expansion joints; cut and space edges of panels to match spacing of structural support elements.
E. Coordinate sheathing installation with installation of materials installed over sheathing so sheathing is not exposed to precipitation or left exposed at end of the workday when rain is forecast.

END OF SECTION 07 46 46

SECTION 07 92 00 - JOINT SEALANTS

PART 1 - GENERAL

1.1 SUMMARY

A. Section Includes:
1. Provide labor, material, services, and equipment necessary to furnish and install work as indicated and as specified herein, which includes, but is not limited to:
a. Exterior and interior sealants.

1.2 WARRANTY

A. Manufacturer's Warranty: Manufacturer agrees to furnish joint sealants to repair or replace those joint sealants that do not comply with performance and other requirements specified in this section within specified warranty period of Five (5) years from date of Substantial Completion.

PART 2 - PRODUCTS

2.1 JOINT SEALANTS, GENERAL

A. Compatibility: Provide joint sealants, backings, and other related materials that are compatible with one another and with joint substrates under conditions of service and application, as demonstrated by joint-sealant manufacturer, based on testing and field experience.
B. Caulking Compounds (Acrylic Latex Sealant)
1. Latex rubber modified, acrylic emulsion polymer sealant compound; manufacturer's standard, one-part, non-sag, mildew resistant, acrylic emulsion sealant complying with ASTM C 834, formulated for accepting paint. (Product recommended for exposed interior locations involving joint movement of less than 5%).
2. Acceptable Standard
a. "Sonolac"; Sonneborn Building Products, Inc.
b. "Acrylic Latex Caulk 832"; Tremco, Inc.
c. "Acrylic Latex Caulk with Silicone"; DAP
d. "Powerhouse Siliconized Acrylic Latex Sealant"; Sherwin-Williams
C. One-Part Elastomeric Sealant (Silicone)
1. One component elastomeric sealant complying with ASTM C 920, Class 25, Type NS (non-sag), unless manufacturer recommends Type S (self-leveling) for the application shown. (general caulking, glazing applications).
a. Acceptable Standard
i) "Dow Corning 791; Dow Corning Corp.
ii) "Omniseal"; Sonneborn Building Products, Inc.
iii) "Spectrem 2; Tremco, Inc.
iv) "MAXFLEX Acrylic Urethane Elastomeric Sealant"; Sherwin-Williams
D. One component mildew resistant silicone sealant used around countertops, backsplashes, and other wet interior locations.
1. Acceptable Standard
a. "Dow Corning 786", Dow Corning Corp.
b. "Sanitary 1700"; General Electric
c. "White Lightning Silicone K&B Sealant"; Sherwin-Williams
2. One-component high movement joints (+100/-50) use sealants in locations indicating high movement.
a. "Dow Corning 790"; Dow Corning Corp.
b. "Spectrem 1"; Tremco, Inc.
c. "LOXON H1 Hybryd"; Sherwin-Williams

2.2 JOINT-SEALANT BACKING

A. Sealant Backing Material, General: Non-staining; compatible with joint substrates, sealants, primers, and other joint fillers; and approved for applications indicated by sealant manufacturer based on field experience and laboratory testing.
B. Cylindrical Sealant Backings: ASTM C 1330, Type C (closed-cell material with a surface skin) and of size and density to control sealant depth and otherwise contribute to producing optimum sealant performance. Provide polyethylene, butyl neoprene or other material that will not bond to sealant., 20 to 25 percent larger in diameter than joint width, unless recommended otherwise by the sealant manufacturer.
C. Bond-Breaker Tape: Polyethylene tape or other plastic tape recommended by sealant manufacturer for preventing sealant from adhering to rigid, inflexible joint-filler materials or joint surfaces at back of joint. Provide self-adhesive tape where applicable.

2.3 MISCELLANEOUS MATERIALS

A. Primer: Material recommended by joint-sealant manufacturer where required for adhesion of sealant to joint substrates indicated, as determined from preconstruction joint-sealant-substrate tests and field tests.
B. Cleaners for Nonporous Surfaces: Chemical cleaners acceptable to manufacturers of sealants and sealant backing materials, free of oily residues or other substances capable of staining or harming joint substrates and adjacent nonporous surfaces in any way, and formulated to promote optimum adhesion of sealants to joint substrates.
C. Masking Tape: Non-staining, nonabsorbent material compatible with joint sealants and surfaces adjacent to joints.

2.4 COLORS

A. Colors: Select colors from standards manufacturer's color charts.
B. Special Colors: Hollow metal door frames at the floor joint shall have caulking color that matches the hollow metal frame color.

PART 3 - EXECUTION

3.1 EXAMINATION

A. Examine joints indicated to receive joint sealants, with Installer present, for compliance with requirements for joint configuration, installation tolerances, and other conditions affecting joint sealant performance. Do not proceed with installation of joint sealants until unsatisfactory conditions have been corrected.

3.2 PREPARATION

A. Surface Cleaning of Joints: Clean out joints immediately before installing joint sealants to comply with recommendations of joint sealant manufacturer and the following requirements:

1. Remove all foreign material from joint substrates that could interfere with adhesion of joint sealant, including dust, paints (except for permanent, protective coatings tested and approved for sealant adhesion and compatibility by sealant manufacturer), old joint sealants, oil, grease, waterproofing, water repellents, water, surface dirt, and frost.
2. Clean concrete, masonry, unglazed surfaces of ceramic tile, and similar porous joint substrate surfaces by brushing, grinding, blast cleaning, mechanical abrading, or a combination of these methods to produce a clean, sound substrate capable of developing optimum bond with joint sealants. Remove loose particles remaining from above cleaning operations by vacuuming or blowing out joints with oil-free compressed air.
3. Remove laitance and form release agents from concrete.
4. Clean metal, glass, porcelain enamel, glazed surfaces of ceramic tile, and other nonporous surfaces with chemical cleaners or other means that do not stain, harm substrates, or leave residues capable of interfering with adhesion of joint sealants.

B. Joint Priming: Prime joint substrates where indicated or where recommended by joint sealant manufacturer based on preconstruction joint sealant-substrate tests or prior experience. Apply primer to comply with joint sealant manufacturer's recommendations. Confine primers to areas of joint sealant bond; do not allow spillage or migration onto adjoining surfaces.

C. Masking Tape: Use masking tape where required to prevent contact of sealant with adjoining surfaces that otherwise would be permanently stained or damaged by such contact or by cleaning methods required to remove sealant smears. Remove tape immediately after tooling without disturbing joint seal.

3.3 SELECTION OF MATERIAL

A. Caulking compounds shall be used for interior nonmoving joints and at locations specifically indicated on Drawings.

B. One component elastomeric silicone sealants shall be used at all exterior joints and interior joints where thermal or dynamic movement is anticipated.

C. One component elastomeric polyurethane sealants shall be used at interior joints where weatherproofing is required.

D. One-part self-leveling polyurethane sealants shall be used for exterior and interior horizontal joints subject primarily to pedestrian traffic and light and moderated vehicular traffic, and in all control joints in slab-on-grade; interior.

E. Acoustical joint sealants shall be used at all walls that are STC rated or where sound attenuation blankets are used.

3.4 INSTALLATION OF JOINT SEALANTS

A. General: Comply with joint sealant manufacturer's printed installation instructions applicable to products and applications indicated, except where more stringent requirements apply.

1. Joints to be filled shall be thoroughly dry and free from dust, dirt, oil, and grease at the time of application or caulks or sealants.
2. Expansion and control joints in exterior walls shall have the joint filler material built into the wall, or between wall and slab, at the time of construction.
3. Masking: Metal shall be masked with masking tape, as well as other surfaces where its required to prevent the sealant smearing the adjacent surface. Upon completion of the caulking, remove the tape.
4. Sealants shall be integral color. Painting of sealants is not allowed.

B. Sealant Installation Standard: Comply with recommendations of ASTM C1193 for use of joint sealants as applicable to materials, applications, and conditions indicated. Provide concave joint.

C. Acoustical Sealant Application Standard: Comply with recommendations of ASTM C919 for use of joint sealants in acoustical applications as applicable to materials, applications, and conditions indicated.

D. Installation of Sealant Backings: Install sealant backings to comply with the following requirements:

1. Install joint fillers of type indicated to provide support of sealants during application and at position required to produce the cross-sectional shapes and depths of installed sealants relative to joint widths that allow optimum sealant movement capability.
a. Do not leave gaps between ends of joint fillers.
b. Do not stretch, twist, puncture, or tear joint fillers.
c. Remove absorbent joint fillers that have become wet prior to sealant application and replace with dry material.
d. Provide backer material in sealed joints at a depth that will permit application of sealant in an hourglass profile with a depth 1/2 the joint width, but in no case less than 1/2".

E. Installation of Sealants: Install sealants by proven techniques that result in sealants directly contacting and fully wetting joint substrates, completely filling recesses provided for each joint configuration, and providing uniform, cross-sectional shapes and depths relative to joint widths that allow optimum sealant movement capability. Install sealants at the same time sealant backings are installed.

F. Tooling of Non-sag Sealants: Immediately after sealant application and prior to time skinning or curing begins, tool sealants to form smooth, uniform beads of configuration indicated, to eliminate air pockets, and to ensure contact and adhesion of sealant with sides of joint. Remove excess sealants from surfaces adjacent to joint. Do not use tooling agents that discolor sealants or adjacent surfaces or are not approved by sealant manufacturer.

G. Sealant Locations

1. Install in exterior joints in vertical surfaces and non-traffic horizontal surfaces as indicated below:
a. Joints between different materials.
b. Perimeter joints between materials and frames of doors, windows, and louvers.
c. Control and expansion joints in ceiling and overhead surfaces.
d. Other joints as indicated or required.
2. Install in exterior joints in horizontal traffic surfaces as indicated below:
a. Control, expansion, and isolation joints in cast-in-place concrete slabs.
b. Joints between different materials listed above.
c. Other joints as indicated or required.
3. Install in interior joints in vertical surfaces and horizontal non-traffic surfaces as indicated below:
a. Perimeter joints of exterior openings where indicated.
b. Joints between tops of non-load-bearing unit masonry walls and underside of cast-in-place concrete slabs and beams.
c. Vertical control joints on exposed surfaces of interior unit masonry and concrete walls and partitions.
d. Perimeter joints between interior wall surfaces and frames of interior doors and windows.
e. Perimeter joints of toilet fixtures and accessories.
f. Other joints as indicated or required.
4. Install in interior joints in horizontal traffic surfaces as indicated below:
a. Control and expansion joints in cast-in-place concrete slabs.
b. Other joints as indicated or required.

3.5 CLEANING AND PROTECTION

A. Clean off excess sealants or sealant smears adjacent to joints as work progresses by methods and with cleaning materials approved by manufacturers of joint sealants and of products in which joints occur.

B. Protect joint sealants during and after curing period from contact with contaminating substances or from damage resulting from construction operations or other causes so that they are without deterioration or damage at time of Substantial Completion. If, despite such protection, damage or deterioration occurs, cut out and remove damaged or deteriorated joint sealants immediately so that and installations with repaired areas are indistinguishable from original work.

3.6 GENERAL INSTALLATION PROVISIONS

A. Inspect both the substrate and conditions under which Work is to be performed. Do not proceed until unsatisfactory conditions have been corrected in an acceptable manner.

B. Comply with manufacturer's installation instructions and recommendations, to the extent that those instructions and recommendations are more explicit or stringent than requirements contained in Contract Documents.

C. Inspect materials or equipment immediately upon delivery and again prior to installation. Reject damaged and defective items.

D. Visual Effects: Provide uniform joint widths in exposed Work. Arrange joints in exposed Work to obtain the best visual effect. Refer questionable choices to the Architect for final decision.

E. Recheck measurements and dimensions, before starting each installation.

F. Install each component during weather conditions and Project status that will ensure the best possible results. Isolate each part of the completed construction from incompatible material as necessary to prevent deterioration.

3.7 FIELD QUALITY CONTROL

A. Field-Adhesion Testing: Field test joint-sealant adhesion to joint substrates as follows:
1. Extent of Testing: Test completed and cured sealant joints (not on mockup) as follows:
a. Perform three tests for the first 100 feet of joint length for each kind of sealant and joint substrate.
2. Test Method: Test joint sealants according to Method A, Field-Applied Sealant Joint Hand Pull Tab, in Appendix X1 in ASTM C 1193 or Method A, Tail Procedure, in ASTM C 1521.
a. For joints with dissimilar substrates, verify adhesion to each substrate separately; extend cut along one side, verifying adhesion to opposite side. Repeat procedure for opposite side.
3. Inspect tested joints and report on the following:
a. Whether sealants filled joint cavities and are free of voids.
b. Whether sealant dimensions and configurations comply with specified requirements.
c. Whether sealants in joints connected to pulled-out portion failed to adhere to joint substrates or tore cohesively. Include data on pull distance used to test each kind of product and joint substrate. Compare these results to determine if adhesion complies with sealant manufacturer's field-adhesion hand-pull test criteria.
4. Record test results in a field-adhesion-test log. Include dates when sealants were installed, names of persons who installed sealants, test dates, test locations, whether joints were primed, adhesion results and percent elongations, sealant material, sealant configuration, and sealant dimensions.
5. Repair sealants pulled from test area by applying new sealants following same procedures used originally to seal joints. Ensure that original sealant surfaces are clean and that new sealant contacts original sealant.
B. Evaluation of Field-Adhesion-Test Results: Sealants not evidencing adhesive failure from testing or noncompliance with other indicated requirements will be considered satisfactory. Remove sealants that fail to adhere to joint substrates during testing or to comply with other requirements. Retest failed applications until test results prove sealants comply with indicated requirements.

END OF SECTION 07 92 00

SECTION 08 12 13 - HOLLOW METAL FRAMES

PART 1 - PRODUCTS

2.2 MANUFACTURERS

A Manufacturer shall be one of the following however products of other manufacturers will be considered for acceptance provided they equal or exceed the material requirements and functional qualities of the specified product and acceptance is provided by the Architect in writing prior to bidding.
1. Ceco Door Products
2. Amweld International, LLC
3. Architectural Openings, Inc.
4. Curries Company
5. Pioneer Industries, Inc.
6. Quality Engineered Products Company, Inc.
7. Steelcraft Door and Frame Products
8. Republic Doors and Frames

2.3 FRAME TYPES

A Frames for interior door openings and borrowed lights.
1. Commercial Steel (CS) Class B coating, mill phosphatized.
2. Provide frames complying with requirements indicated below by referencing ANSI A250.8 for level and model and ANSI A250.4 for physical-endurance level and other indicated requirements.
a. Rating: Heavy Duty
b. Classification: Level 2
c. Physical Performance: Level B
d. Steel: 18-gauge
e. Finish: G40
B Welded Frames: Frames shall be mitered only and set-up and fully welded, "SUW" with full profile welds on exposed surfaces, dressed smooth and flush. Provide a temporary spreader bar securely fastened to the bottom of each frame.
1. Frames for interior use shall have mitered corners with frame faces welded and ground smooth to appear seamless.
2. Welded frames shall be smooth, even, and have no blemishes or irregularities in finish or surface on all exposed sides and planes.
3. Headers and jambs shall be secured at corners either by external welding with seamless face joints.
4. Frames shall be provided with temporary spreader bars for shipping and handling purposes.
5. Frames shall be furnished in manufacturer's standard factory-applied coat of rust- inhibiting primer complying with ANSI/SDI A250.10 for acceptance criteria.

2.4 FRAME ASSEMBLIES

A Use steel anchors sized to accommodate frame jamb depth and face dimension on frames.
1. Masonry Type: Adjustable strap-and-stirrup or T-shaped anchors to suit frame size, not less than 0.042 inch thick, with corrugated or perforated straps not less than 2 inches wide by 10 inches long; or wire anchors not less than 0.177 inch thick.
i) Jamb Anchor Locations: Locate jamb anchors not more than 16 inches from top and bottom of frame. Space anchors not more than 30 inches o.c., to match coursing.
B Floor Anchors: Provide floor angle clip type anchors formed from same material as frames, minimum thickness of 16-gauge for each jamb and mullion that extends to floor, and secure with post-installed expansion anchors.
1. Anchors to receive 2 fasteners per jamb and welded to bottom of each jamb.
2. Floor anchors may be set with power-actuated fasteners instead of post-installed expansion anchors if so indicated as approved by shop drawings.
C Masonry and Concrete Walls: Coordinate installation of frames to allow for solidly filling space between frames and masonry with grout.

2.5 MATERIALS

A Cold-Rolled Steel Sheet: ASTM A 1008/A 1008M, Commercial Steel (CS), Type B; suitable for exposed applications.
B Frame Anchors: ASTM A 879/A 879M, Commercial Steel (CS), 04Z coating designation; mill phosphatized.
C Supports and Anchors: Fabricate of not less than 18-gauge galvanized sheet steel.
D Power-Actuated Fasteners in Concrete: Fastener system of type suitable for application indicated, fabricated from corrosion-resistant materials, with clips or other accessory devices for attaching hollow-metal frames of type indicated.
E Grout: ASTM C 476, except with a maximum slump of 4 inches, as measured according to ASTM C 143/C 143M.
F Loose Fill Mineral Wool: Nodulated mineral fiber loose fill density, 4-6 lbs. cu. Ft., ASTM C764, Type I, Class 1 with maximum flame-spread of 25 and smoke-developed indexes of 50, respectively, per ASTM E 84.
G Bituminous Paint: Cold-applied non-fibered asphalt emulsion complying with ASTM D1227, Type 2 formulated for 30 mill thickness per coat minimum.
1. Interior frames set in masonry or concrete walls shall be factory coated completely on the inside and at points in contact with masonry or concrete with bituminous mastic coating.

2.6 FABRICATION, GENERAL

A Fabricate steel frame units to be rigid, neat in appearance, and free from defects, warp, or buckle. Accurately form metal to required sizes and profiles. Wherever practicable, fit and assemble units in the manufacturer's plant. Clearly identify Work that cannot be permanently factory assembled before shipment, to assure proper assembly at the project site.
B Fabricate concealed stiffeners, reinforcement, edge channels, and moldings from either cold rolled or hot rolled steel (at fabricator's option).
C Hardware Preparation
1. Prepare hollow metal units to receive mortised and concealed door hardware, including cutouts, reinforcing, drilling, and tapping in accordance with final door hardware schedule and templates provided by hardware supplier. Comply with applicable requirements of ANSI A115 "Specifications for Door and Frame Preparation."
2. Locate finish hardware as shown on final shop drawings, or if not shown, in accordance with recommended hardware locations specified in "S.D.I. 100-98, Recommended Specifications, Standard Steel Doors and Frames," as published by the Steel Door Institute.
3. Hollow metal units shall be reinforced, drilled, and tapped to receive mortised hinges, locks, latches, and flush bolts, as required in ANSI/DHI A115 and ANSI/SDI A250.6.
4. Locate hardware in accordance with ANSI/SDI A250.8.
5. Hardware Reinforcement: Fabricate reinforcement plates from same material as hollow metal units to comply with the following minimum sizes:
a. Hinges: Minimum 7-gauge by 1 1/2 inches wide by 6 inches longer than hinge, secured by not less than 6 spot welds.
b. Pivots: Minimum 7-gauge by 1 1/2 inches wide by 6 inches longer than hinge, secured by not less than 6 spot welds.
c. Provide minimum 14-gauge reinforcement for surface exit devices, floor check hinges and strike jambs.

2.7 FINISHING

A Shop Painting
1. Primer: Rust-inhibitive enamel or paint, either air-drying or baking, suitable as a base for specified finish paints complying with ANSI A224.1, "Test Procedure and Acceptance Criteria for Prime Painted Steel Surfaces for Steel Doors and Frames."
2. Clean, treat, and shop paint all surfaces of fabricated hollow metal frames, including galvanized surfaces plus back prime of all hollow metal door frames.
3. Clean steel surfaces of mill scale, rust, oil, grease, dirt, and other foreign materials before the application of the shop coat of paint.
4. Apply shop coat of prime paint of even consistency to provide a uniformly finished surface ready to receive field applied paint.

PART 3 - EXECUTION

3.1 INSTALLATION

A. Install standard steel frames, and accessories in accordance with final shop drawings, manufacturer's data, and as herein specified.
B. Placing Frames: Comply with provisions of SDI-105 "Recommended Erection Instructions for Steel Frames," unless otherwise indicated.
1. Set frames prior to construction of enclosing walls and ceilings. After wall construction is completed, remove temporary braces and spreaders leaving surfaces smooth and undamaged.
2. Set frames in position; plumb, align, and brace securely until permanent anchors are set. Anchor bottom of frames to floors with expansion bolts or with power fasteners. Where frames require ceiling struts or other structural overhead bracing, they shall be anchored securely to ceilings or structural framing above, as indicated or specified.
3. The finished work shall be rigid, neat in appearance, and free from defects. Form molded members straight and true with joints coped or mitered, well formed, and in true alignment. Welded joints on exposed surfaces shall be dressed smooth so they are invisible after finishing.
4. Provide filler plate at all hardware preps, such as hinge and strike preps, that are unused.
5. Interior frames set in masonry or concrete walls shall be filled completely with grout after installation of frame.
6. Masonry and Concrete Walls: Coordinate installation of frames to allow for solidly filling space between frames and masonry with grout.
7. Installation Tolerances: Adjust hollow-metal door frames for squareness, alignment, twist, and plumb to the following tolerances:
a. Squareness: Plus or minus 1/16 inch, measured at door rabbet on a line 90 degrees from jamb perpendicular to frame head.
b. Alignment: Plus or minus 1/16 inch, measured at jambs on a horizontal line parallel to plane of wall.
c. Twist: Plus or minus 1/16 inch, measured at opposite face corners of jambs on parallel lines, and perpendicular to plane of wall.
d. Plumbness: Plus or minus 1/16 inch, measured at jambs at floor.
C. Provide all items and accessories as required for a complete installation in every respect.
D. Corrosion Protection: Coat surfaces that will come into contact with grout, concrete, masonry, wood, or dissimilar metals with a heavy coat of bituminous paint.

3.2 GENERAL INSTALLATION PROVISIONS

A. Inspect both the substrate and conditions under which Work is to be performed. Do not proceed until unsatisfactory conditions have been corrected in an acceptable manner.
B. Comply with manufacturer's installation instructions and recommendations, to the extent that those instructions and recommendations are more explicit or stringent than requirements contained in Contract Documents.
C. Inspect materials or equipment immediately upon delivery and again prior to installation. Reject damaged and defective items.
D. Provide attachment and connection devices and methods necessary for securing Work. Secure Work true to line and level. Allow for expansion and building movement.
E. Visual Effects: Provide uniform joint widths in exposed Work. Arrange joints in exposed Work to obtain the best visual effect. Refer questionable choices to the Architect for final decision.

END OF SECTION 08 12 13

HARVARD ● JOLLY
ARCHITECTURE
1639 Hendry St. Fort Myers Florida 33901 | 561-478-4457 | www.HarvardJolly.com | AAC000119

ESTERO ON THE RIVER
RESTROOM FACILITY
ESTERO ,FLORIDA
CONSTRUCTION DOCUMENTS

Comm. No: 22031.01
Date: 09/08/2023
Drawn: BKL

Revisions		
No.	Date	Note

TO THE BEST OF MY KNOWLEDGE, THE PLANS AND SPECIFICATIONS COMPLY WITH THE MINIMUM BUILDING CODES.

Architect of Record
Licence #

SPECIFICATIONS

A-702

Filename:\\ftmwin01.hj-dom.local\Dwgs\2022\22031.01 Estero On The River Restroom Facility\5 CAD\Sheets\30X42\A-702 Specifications Plot Date:9.8.2023 Plotted By:Blaine Lind

SECTION 08 12 18 - ALUMINUM FLUSH DOORS AND FRAMES
PART 1 - GENERAL
1.1 WARRANTY

A. Warrant doors, frames, and factory hardware against failure in materials and workmanship, including excessive deflection, faulty operation, defects in hardware installation, and deterioration of finish or construction in excess of normal weathering.
B. Warranty Period: Ten (10) years starting on date of shipment. In addition, a limited lifetime (while the door is in its specified application in its original installation) warranty covering: failure of corner joinery, core deterioration, delamination or bubbling of door skin.
1.2 PERFORMANCE
A. Approvals: Manufacturer shall certify that product complies with large and small missile impact criteria and has been tested and approved in compliance with Florida Product Approval or Miami Dade NOA and applicable requirements.
PART 2 - PRODUCTS
2.1 MANUFACTURER

A. Manufacturer and basis of design shall be the following however products of other manufacturers will be considered for acceptance provided they equal or exceed the material requirements and functional qualities of the specified product and acceptance is provided by the Architect in writing prior to bidding.
1. Cline Aluminum Doors
B. The following manufacturers are acceptable provided they equal or exceed the material requirements and functional qualities of the basis of design product.
1. Alutech Corporation
2. Cross Aluminum
2.2 FRP FLUSH DOORS

A. Basis of Design: "Model 100BE"

1. Product approval FL#6336.2

B. Door Opening Size: As indicated on the drawings.

C. Aluminum Members: Alloy and temper recommended by manufacturer for strength, corrosion resistance, and application of required finish.

D. Aluminum Door Components: Minimum 5-ply composite laminated construction to include:

1. Facing: One-piece 0.040-inch smooth 5005-H14 stretcher-leveled aluminum alloy.
2. Substrate: One-piece oil-tempered hardboard backer.
3. Core: Organic materials shall be used to form a marine grade honeycomb core with high compression strength of 94.8 psi (ASTM C365), and internal aluminum hardware backup tube.
4. Hardware Backup: The hardware backup tube shall be a minimum of 4.25-inches in width, 1.375-inches in depth with a wall thickness of 0.0125-inches. Contiguous for the full perimeter of the door to allow for all specified and non-specified hardware reinforcement.
5. Hardware Prep: Basic to include mortise lock edge prep or cylindrical lock prep.

6. Bonding Agent: Environmentally friendly adhesive with strength buildup of 350 pounds per square inch.
7. Perimeter Door Trim: Wall thickness of 0.050-inch minimum in 6063-T5 extruded aluminum alloy with special beveled edge cap design and integral weather stripping on lock stile.
8. Replaceable Door Trim: Mechanically fastened to the hardware backup tube, allowing for replacement.
9. Trim Finish: To have minimum of a Class I anodized finish.
10. Weather stripping: Replaceable wool pile with nylon fabric, polypropylene backing meeting AAMA 701standards. Applied weather stripping is not acceptable.
11. Materials: Only nonferrous, non-rusting members shall be acceptable, including tie rods, screws and reinforcement plates.
12. Regulations: All components and agents to meet EPA standards.
E. Glazing:
1. Glass shall be 0.5625-inch laminated hurricane glass.
2. Stops shall be snap-in, non-removable type, 6063-T5 extruded aluminum alloy and 0.050-inch thickness.
3. Seals shall be vinyl inserts.
4. No fasteners shall be exposed.
2.3 ALUMINUM FRAMING

A. Size and Type: As indicated on the drawings.
B. Frame Components: Extruded channel 6063-T5 aluminum alloy, minimum wall thickness 0.125-inch; cut corners square and joinery shall be mechanical with no exposed fasteners.
C. Profile: Open Back with Applied Stop (OBS), 1.75-inch by 6-inch.
D. Hinge and Strike Mounting Plates: Extruded aluminum alloy bar stock, 0.1875-inch thick mounted in a concealed integral channel with no exposed fasteners.
E. Replaceable Weather stripping: AAMA 701, wool pile with nylon fabric, polypropylene backing, at head and jambs.
F. Door Stop: No screw-on stops acceptable.
G. Anchors:
1. Anchors appropriate for wall conditions to anchor framing to wall materials.
2. Door Jamb and Header Mounting Holes: Maximum of 24-inch centers.
3. Secure head and sill members of transom, side lites, and similar conditions.
2.4 FABRICATION
A. Aluminum Flush Door Construction: Of type, size and design indicated:
1. Minimum Thickness: 1.75-inches, 5-ply composite laminate system.
2. Door Size: Sizes shown are nominal; provide standard clearances as follows:
a. Hinge and Lock Stiles: 0.125-inch.
b. Between Meeting Stiles: 0.25-inch.
c. At Top Rails: 0.125-inch.
d. Between Door Bottom and Threshold: 0.125-inch.

B. Sizes and Profiles: Required sizes for door and frame units, and profile requirements shall be as indicated on the Drawings.

C. Coordination of Fabrication: Field measure before fabrication and show recorded measurements on shop drawings.

D. Assembly: Complete cutting, fitting, forming, drilling, and grinding of metal before assembly. Remove burrs from cut edges.

E. Welding: Welding of doors or frames is not acceptable.
F. Fit: Maintain continuity of line and accurate relation of planes and angles. Secure attachments and support at mechanical joints with hairline fit at contacting members.
2.5 HARDWARE

A. Pre-machine doors in accordance with templates from specified hardware manufacturers and hardware schedule.

B. Factory install hardware.
2.6 ACCESSORIES
A. Fasteners: Aluminum, nonmagnetic stainless steel, or other material warranted by manufacturer as non-corrosive and compatible with aluminum components.
1. Do not use exposed fasteners.
B. Brackets and Reinforcements: Manufacturer's high-strength aluminum units where feasible, otherwise, nonferrous stainless steel.
C. Bituminous Coating: Cold-applied asphaltic mastic, compounded for 30-mil thickness per coat.
2.7 ALUMINUM FINISHES
A. Finish: Anodic coating; AA-M12C22A34 Class II mechanical finish, non-specular as fabricated, with medium-matte chemical etch, minimum thickness 0.4-mil. As selected by the Architect.
PART 3 - EXECUTION
3.1 EXAMINATION

A. Examine areas to receive doors. Notify Architect of conditions that would adversely affect installation or subsequent use. Do not proceed with installation until unsatisfactory conditions are corrected.
3.2 PREPARATION

A. Ensure openings to receive frames are plumb, level, square, and in tolerance.
3.3 INSTALLATION

A. Install doors in accordance with manufacturer's instructions.

B. Install doors plumb, level, square, true to line, and without warp or rack.

C. Anchor frames securely in place.
D. Separate aluminum from other metal surfaces with bituminous coatings or other means approved by Architect.

E. Set thresholds in bed of mastic and backseal.

F. Install exterior doors to be weathertight in closed position.

G. Repair minor damages to finish in accordance with manufacturer's instructions and as approved by Architect.

H. Remove and replace damaged components that cannot be successfully repaired as determined by Architect.
3.4 FIELD QUALITY CONTROL

A. Manufacturer's Field Services: Manufacturer's representative shall provide technical assistance and guidance for installation of doors.
3.5 ADJUSTING

A. Adjust doors, hinges, and locksets for smooth operation without binding.

END OF SECTION 08 12 18

SECTION 08 14 16 - FLUSH WOOD DOORS
PART 1 - GENERAL
1.1 DOORS

A. Interior Solid-Core Doors:

1. Grade: Paint Grade.
2. Thickness: 1 3/4"
3. Adhesive: Interior use, Type II.
1.2 FABRICATION

A. Factory fit doors to suit frame-opening sizes indicated. Comply with clearance requirements of referenced quality standard for fitting unless otherwise indicated.

B. Factory machine doors for hardware that is not surface applied. Locate hardware to comply with DHI-WDHS-3. Comply with final hardware schedules, door frame Shop Drawings, BHMA-156.115-W, and hardware templates.
1.3 EXAMINATION

A. Examine doors and installed door frames, with Installer present, before hanging doors.
1. Verify that installed frames comply with indicated requirements for type, size, location, and swing characteristics and have been installed with level heads and plumb jambs.
2. Reject doors with defects.
B. Proceed with installation only after unsatisfactory conditions have been corrected.
1.4 INSTALLATION
C. Installation Instructions: Install doors to comply with manufacturer's written instructions and referenced quality standard.
1.5 ADJUSTING

A. Operation: Rehang or replace doors that do not swing or operate freely.
B. Finished Doors: Replace doors that are damaged or that do not comply with requirements. Doors may be repaired or refinished if Work complies with requirements and shows no evidence of repair or refinishing.
END OF SECTION 08 14 16

SECTION 08 51 13 - ALUMINUM WINDOWS
PART 1 - GENERAL
1.1 WARRANTY
A. Manufacturer's Warranty: Manufacturer agrees to repair or replace aluminum windows that fail in materials or workmanship within specified warranty period.
1. Failures include, but are not limited to, the following:
a. Failure to meet performance requirements.
b. Structural failures including excessive deflection, water leakage, condensation, and air infiltration.
c. Deterioration of materials and finishes beyond normal weathering.
d. Failure of insulating glass.
2. Warranty Period:
a. Window: One (1) year from date of Substantial Completion.
b. Aluminum Finish: Five (5) years from date of Substantial Completion.
1.2 PERFORMANCE
A. Delegated-Design: Provide design services, calculations and shop drawings for delegated design requirements complying with code requirements, performance requirements and design criteria signed and sealed by an engineer registered in the State of Florida.
B. Approvals: Manufacturer shall certify that product complies with large impact criteria and has been tested and approved in compliance with Florida Product Approval or Miami Dade NOA and applicable requirements.
C. Windows shall also meet all requirements of South Florida Building Code Protocols TAS 201, TAS 202, and TAS 203 and comply with the following specific performance requirements indicated.
1. Air Infiltration: When tested in accordance with ASTM E 283 and TAS 202 at differential static pressure of manufacturer's testing results of a wall completed window systems shall comply with manufacturers testing results.
2. Water Infiltration: No uncontrolled water on indoor face of any component when tested in accordance with ASTM E 331 and TAS 202 at a static pressure of 12 PSF operable, 15 PSF fixed.
3. Static Load: There shall be no damage to fasteners, hardware, accessories, or any other damage that would render the window inoperable when tested in accordance with ASTM E 330 and TAS 202 at a differential static pressure as indicated on the structural drawings.
4. Forced Entry Resistance: Windows shall meet all test requirements of AAMA 1302.5 and TAS 202.
5. Large & Small Missile Impact: Windows shall successfully pass the test requirements of both ASTM E 1886/E 1996 and South Florida Protocols TAS 201.
6. Cyclic Load: Windows shall successfully pass the test requirements of both ASTM E 1886/E 1996 and South Florida Protocols TAS 203.
7. Acoustical Performance: When tested in accordance with ASTM E 90 and ASTM E 1332, the Sound Transmission Class (STC), and Outdoor-Indoor Transmission Class (OITC) shall not be less than 36 STC and 27 OITC.
8. Life Cycle Testing: When tested in accordance with AAMA 910, there shall be no damage to fasteners, hardware parts, or any other damage that would cause the specimen to be inoperable. Resistance to air leakage and water penetration resistance test results shall not exceed the gateway performance.
PART 2 - PRODUCTS
2.1 MANUFACTURERS
A. Manufacturer and basis of design shall be the following however products of other manufacturers will be considered for acceptance provided they equal or exceed the material requirements and functional qualities of the specified product and acceptance is provided by the Architect in writing prior to bidding.
1. YKK AP American, Inc.
B. The following manufacturers are acceptable provided they equal or exceed the material requirements and functional qualities of the basis of design product.
1. Kawneer
2. Old Castle
2.2 ALUMINUM WINDOWS
A. Basis of Design: "YOW 225 Impact Monolithic"
B. Window Certification: AAMA certified with label attached to each window.
C. Window Framing System:
1. AAMA Designation: AW-65
2. Description: The windows shall be extruded aluminum; 2 1/4" frame depth. Vents shall be flush with frame and have mitered corner construction; factory-assembled.
3. Glazing: See specification section "Glazing"
2.3 MATERIALS
A. Extrusions: ASTM B 221 (ASTM B 221M), 6063-T5 and 6063-T6 Aluminum Alloys.
B. Aluminum Sheet:
1. Anodized Finish: ASTM B 209 (ASTM B 209M), 5005-H14 Aluminum Alloy, 0.050" minimum thickness.
2.4 ACCESSORIES
A. Manufacturer's Standard Accessories:
1. Fasteners: All fasteners to be AISI 300 series (except for self-drilling which are to be AISI 400 series) stainless steel.
2. Sealant: Non-skinning type, AAMA 803.3
3. Glazing: Setting blocks, edge blocks and spacers in accordance with ASTM C 864, shore durometer hardness as recommended by manufacturer; glazing gaskets in accordance with ASTM C 864.
4. Glazing Adhesive: Structural silicone sealant.
5. Weather Strip: Plastic rubber or equal.
2.5 FABRICATION
A. Fabricate aluminum windows in sizes indicated. Include a complete system for assembling components and anchoring windows. Fabricate and assemble units with joints only at intersection of aluminum members with hairline joints; rigidly secured and sealed in accordance with manufacturer's recommendations.
B. Glaze aluminum windows in the factory.
C. Weather strip each operable sash to provide weathertight installation.
D. Weep Holes: Provide weep holes and internal passages to conduct infiltrating water to exterior.
E. Provide water-shed members above side-hinged sashes and similar lines of natural water penetration.
F. Complete fabrication, assembly, finishing, and other work in the factory to greatest extent possible. Disassemble components only as necessary for shipment and installation.
G. Fabrication Tolerance:
1. Material Cuts: Square to 1/32 inch off square, over largest dimension; proportionate amount of 1/32 inch on the two dimensions.
2. Maximum Offset: 1/64 inch in alignment between two consecutive members in line, end to end.
3. Maximum Offset: 1/64 inch between framing members at glazing pocket corners.
4. Joints (Between adjacent members in same assembly): Hairline and square to adjacent member.
5. Variation (In squaring diagonals for doors and fabricated assemblies): 1/16 inch (1.6 mm).
6. Flatness (For doors and fabricated assemblies): +/- 1/16 inch off neutral plane.
2.6 FINISH
A. Comply with NAAMM's "Metal Finishes Manual for Architectural and Metal Products" for recommendations for applying and designating finishes. Sections shall be free of scratches and other serious surface blemishes and chemically cleaned.
B. Aluminum Surfaces: Sections shall be free of scratches and other serious surface blemishes and chemically cleaned.
C. Appearance of Finished Work: Noticeable variations in same piece are not acceptable. Variations in appearance of adjoining components are acceptable if they are within the range of approved Samples and are assembled or installed to minimize contrast.
D. Protect mechanical finishes on exposed surfaces from damage by applying a strippable, temporary protective covering before shipping.
E. Clear Anodic Finish: Mechanical Finish, non-specular as fabricated Chemical Finish, etched Anodic Coating, clear coating 0.7mils or thicker complying with AAMA 611. Complying with paint manufacturer's written instructions for cleaning, preparing, pretreating and apply coating to exposed metal surfaces.
PART 3 - EXECUTION
3.1 EXAMINATION
A. Examine openings, substrates, structural support, anchorage, and conditions, with Installer present, for compliance with requirements for installation tolerances and other conditions affecting performance of the Work.
B. Verify rough opening dimensions, levelness of sill plate, and operational clearances.
C. Examine wall flashings, vapor retarders, water and weather barriers, and other built-in components to ensure weathertight window installation.
D. Proceed with installation only after unsatisfactory conditions have been corrected.
3.2 INSTALLATION
A. Comply with manufacturer's written instructions for installing windows, hardware, accessories, and other components. For installation procedures and requirements not addressed in manufacturer's written instructions, comply with installation requirements in ASTM E 2112.
B. Install windows level, plumb, square, true to line, without distortion or impeding thermal movement, anchored securely in place to structural support, and in proper relation to wall flashing and other adjacent construction to produce weathertight construction.
C. Install windows and components to drain condensation, water penetrating joints, and moisture migrating within windows to the exterior.
D. Separate aluminum and other corrodible surfaces from sources of corrosion or electrolytic action at points of contact with other materials.
3.3 FIELD QUALITY CONTROL
A. Test Area for Each Individual Building:
1. Perform a minimum of two tests in areas as directed by the Architect.
B. Test Type:
1. Water Spray Test: Before installation of interior finishes has begun, areas designated by Architect shall be tested according to AAMA 501.2 and shall not evidence water penetration.

C. Repair or remove work if test results and inspections indicate that it does not comply with specified requirements.

D. Additional testing and inspecting, at Contractor's expense, will be performed to determine compliance of replaced or additional work with specified requirements.
E. Aluminum framed assemblies will be considered defective if they do not pass tests and inspections.
F. Prepare test and inspection reports.
END OF SECTION 08 51 13

SECTION 09 29 00 - GYPSUM BOARD
PART 1 - PRODUCTS
2.1 MANUFACTURER

A. Manufacturer and basis of design shall be the following however products of other manufacturers will be considered for acceptance provided they equal or exceed the material requirements and functional qualities of the specified product and acceptance is provided by the Architect in writing prior to bidding.

1. USG Corporation and manufacturer as indicated.

B. The following manufacturers are acceptable provided they equal or exceed the material requirements and functional qualities of the basis of design product.
1. National Gypsum Company
2. Georgia Pacific
3. Certainteed Gypsum
4. Continental Building Products
2.2 GYPSUM BOARD, GENERAL

A. Size: Provide maximum lengths and widths available that will minimize joints in each area and that correspond with support system indicated.
2.3 GYPSUM BOARD

A. Gypsum Board: ASTM C1396/C1396M

1. Basis of Design: "Firecode Core Type X"
2. Core: 5/8 inch, Type X
3. Long Edges: Tapered
2.4 TRIM ACCESSORIES
A. Interior Trim: Install trim at the following locations with screws spaced 8" o.c. both sides, all other trim fastened per GA 216.
1. Cornerbead: Use at outside corners unless indicated otherwise.
2. L-Bead: Use where indicated.
3. U-Bead: use where indicated.
2.5 JOINT TREATMENT MATERIALS

A. General: Comply with ASTM C 475/C 475M.

B. Joint Tape Locations

1. Interior Paper-Faced Gypsum Board: Paper.
2. Glass-Mat Gypsum Sheathing Board: 10-by-10 fiberglass mesh.

C. Joint Compound for Interior Gypsum Board: For each coat, use formulation that is compatible with other compounds applied on previous or for successive coats.

1. Prefilling, Open Joints, and Damaged Areas: Use setting-type taping compound.
2. Embedding and First Coat: For embedding tape and first coat on joints, fasteners and trim flanges, use drying-type, all-purpose compound.
a. Use setting-type compound for installing paper-faced metal trim accessories.
3. Fill Coat: For second coat, use drying-type, all-purpose compound.
4. Finish Coat: For third coat, ready mix drying-type, all-purpose compound.

D. Joint Compound for Exterior Applications:

1. Glass-Mat Gypsum Sheathing Board: As recommended by sheathing board manufacturer.

2.6 AUXILIARY MATERIALS

A. General: Provide auxiliary materials that comply with referenced installation standards and manufacturer's written recommendations.

B. Screws for Gypsum Board (ASTM C1002): Phillips head galvanized steel Type self drilling screws, length and type as required and recommended by gypsum board manufacturer.

1. Type S, bugle head, rust resistant, sharp point, and fine thread for light gauge steel or furring.

C. Joint Paper Tape: 2 inch wide paper tape with center crease and buffed on both sides, comply with ASTM C475.

D. Gypsum board sheathing sealants, caulk, tape:

1. Don Corning 795 or equivalent; Pecora 895 or equivalent
2. Borden HPPG Elmer's siliconized acrylic latex caulk or equivalent.
3. 2" wide 10 x 10 glass mesh quick tape or equivalent.
E. Adhesive: Adhesive for adhering gypsum board to masonry and concrete shall be as recommended by the gypsum board manufactures.
PART 2 - EXECUTION
3.1 EXAMINATION

A. Examine areas and substrates including welded hollow-metal frames and framing, with Installer present, for compliance with requirements and other conditions affecting performance.

B. Examine panels before installation. Reject panels that are wet, moisture damaged, and mold damaged.

C. Proceed with installation only after unsatisfactory conditions have been corrected.
3.2 APPLYING AND FINISHING PANELS, GENERAL

A. Comply with ASTM C 840 and GA 216.

B. Install ceiling panels across framing to minimize the number of abutting end joints and to avoid abutting end joints in central area of each ceiling. Stagger abutting end joints of adjacent panels not less than one framing member.

C. Locate edge and end joints over supports, except in ceiling applications where intermediate supports or gypsum board back-blocking is provided behind end joints. Do not place tapered edges against cut edges or ends. Stagger vertical joints on opposite sides of partitions. Do not make joints other than control joints at corners of framed openings.
D. Isolate perimeter of gypsum board applied to non-load-bearing partitions at structural abutments. Provide 1/4- to 1/2-inch wide spaces at these locations and trim edges with edge trim where edges of panels are exposed. Seal joints between edges and abutting structural surfaces with acoustical sealant.
E. Attachment to Steel Framing: Attach panels so leading edge or end of each panel is attached to open (unsupported) edges of stud flanges first.
F. Hold gypsum board 1/2" off of floor. Bottom of all gypsum board panels to slab shall receive a continuous bead of sealant with a smooth finish aligned with the finished face of the gypsum board.
3.3 APPLYING INTERIOR GYPSUM BOARD

A. Install interior gypsum board in the following locations:

1. Wallboard Type: As indicated on drawings.

B. Single-Layer Application:

1. On ceilings, apply gypsum panels before wall/partition board application to greatest extent possible and at right angles to framing unless otherwise indicated.
a. On partitions/walls, apply gypsum panels vertically (parallel to framing) unless otherwise indicated.
2. Fastening Methods: Apply gypsum panels to supports with steel drill screws.
3.4 FINISHING GYPSUM BOARD

A. General: Treat gypsum board joints, interior angles, edge trim, control joints, penetrations, fastener heads, surface defects, and elsewhere as required to prepare gypsum board surfaces for decoration. Promptly remove residual joint compound from adjacent surfaces.

B. Prefill open joints, rounded or beveled edges, and damaged surface areas.

C. Apply joint tape over gypsum board joints, except for trim products specifically indicated as not intended to receive tape.

D. Gypsum Board Finish Levels: Finish panels to levels indicated below and according to ASTM C 840:

1. Level 3: Mechanical, Electrical Rooms, Storage Rooms, and where indicated.
2. Level 4: All other spaces unless indicated otherwise.

E. Glass-Mat Gypsum Sheathing Board: Finish according to manufacturer's written instructions for use as exposed soffit board.
3.5 FINISHING GYPSUM BOARD ASSEMBLIES

A. Levels of Finish: The following levels of finish are established as a guide for specific final finishes in accordance with GA-214.

1. Level 3: Joints and interior angles shall have tape embedded in joint compound, and two separate coats of joint compound applied over joints, angles, fastener heads, and accessories. Joint compound shall be smooth and free of tool marks and ridges. Note: It is recommended that the prepared surface be coated with a primer/sealer prior to the application of final finishes. See painting/wall covering specification in this regard. This final level shall be used in areas that are to receive heavy textured, thick (1/8 inch or greater) wall coverings.
2. Level 4: Joints and interior angles shall have tape embedded in joint compound, and three separate coats of joint compound applied over joints, angles, fastener heads, and accessories. Joint compound shall be smooth and free of tool marks and ridges. Note: Prepare surface to be coated with a primer/sealer prior to the application of final finishes. This finish level shall be used where textured finishes, wall coverings, and painted (flat or eggshell) finishes are to be applied.
END OF SECTION 09 29 00

SECTION 09 91 13 - EXTERIOR PAINTING
PART 1 - GENERAL
1.1 WARRANTY

A. Contractor shall provide five (5) year warranty against defects in labor and installation of paint materials in the form indicated at the end of this section.

B. Manufacturer shall provide five (5) year warranty against defects in all paint products and materials incorporated into the work.
PART 2 - PRODUCTS
2.1 MANUFACTURERS

A. Acceptable Manufacturers
1. The painting schedule is based on products manufactured by the Sherwin-Williams Company.
B. Manufacturers: Subject to compliance with requirements, provide products by one of the following:
1. Sherwin Williams
2. Benjamin Moore & Co.
3. PPG
2.2 PAINTING SCHEDULE
A. Cement Plaster and Cementitious Siding
1. Latex Systems
a. Satin Finish
1st Coat: S-W Loxon Concrete & Masonry Primer Sealer, LX02W50 (3.2 dry) - MPI#3
2nd Coat: S-W SuperPaint Acrylic Satin, A89 Series - MPI#15
3rd Coat: S-W SuperPaint Acrylic Satin, A89 Series (1.4-mil dry per coat)
B. Masonry (CMU)
1. Latex Systems
a. Satin Finish
1st Coat: S-W Pro Industrial Heavy-Duty Block Filler, B42W150 (8-10.5mil dry) - MPI#4 X-Green
2nd Coat: S-W SuperPaint Acrylic Satin, A89 Series - MPI#15
3rd Coat: S-W SuperPaint Acrylic Satin, A89 Series (1.4-mil dry per coat)
C. Metal - (Misc. Iron, Ornamental Iron, Structural Iron, Ferrous Metal)
1. Latex Systems
a. Semi-Gloss Finish
1st Coat: S-W Pro Industrial Pro-Cryl® Universal Primer, B66W1300 Series (2.0 - 4.0-mil dry) - MPI#107
2nd Coat: S-W Pro Industrial DTM Acrylic Semi-Gloss Coating, B66W1150 Series - MPI#114
3rd Coat: S-W Pro Industrial DTM Acrylic Semi-Gloss Coating, B66W1150 Series (2.5 - 4.0-mil dry per coat)
2.5 MATERIALS - GENERAL REQUIREMENTS

A. Paints and Coatings - General
1. Unless otherwise indicated, provide factory-mixed coatings.
2. When required, mix coatings to correct consistency in accordance with manufacturer's instructions before application.
3. Do not reduce, thin, or dilute coatings or add materials to coatings unless approved in manufacturer's product instructions.
4. Confirm VOC's need by using the products MSDS sheets.
B. Primers: Where the manufacturer offers options on primers for a particular substrate, use primer categorized as "best" by the manufacturer.
2.6 ACCESSORIES

A. Coating application accessories: Provide all primers, sealers, cleaning agents, cleaning cloths, sanding materials, and clean-up materials required, per manufacturer's specifications.
PART 3 - EXECUTION
3.1 EXAMINATION

A. Examine substrates and conditions, with Applicator present, for compliance with requirements for maximum moisture content and other conditions affecting performance of the Work.
B. Maximum Moisture Content of Substrates: When measured with an electronic moisture meter as follows (Do not apply finishes unless moisture content of surfaces is below the following maximums):
1. Fiber-Cement Board: 12 percent
2. Masonry (Clay and CMUs): 12 percent
C. Verify suitability of substrates, including surface conditions and compatibility, with existing finishes and primers.
D. Proceed with coating application only after unsatisfactory conditions have been corrected.
1. Application of coating indicates acceptance of surfaces and conditions.
E. Do not begin application of coatings until substrates have been properly prepared; notify Owner's Representative of unsatisfactory conditions before proceeding.
F. If substrate preparation is the responsibility of another installer, notify Owner's Representative of unsatisfactory preparation before proceeding.
G. Do not paint over dirt, rust, scale, grease, moisture, scuffed surfaces, or conditions otherwise detrimental to formation of a durable paint film.
H. Test shop applied primer for compatibility with subsequent cover materials.
3.2 PREPARATION
A. Comply with manufacturer's written instructions and recommendations in "MPI Architectural Painting Specification Manual" applicable to substrates and paint systems indicated.
B. Clean substrates of substances that could impair bond of paints, including dust, dirt, oil, grease, and incompatible paints and encapsulants. Remove incompatible primers and reprime substrate with compatible primers or apply tie coat as required to produce paint systems indicated.
C. The surface shall be dry and in sound condition. Remove all oil, dust, dirt, loose rust, peeling paint, or other contamination to ensure good adhesion.

D. Provide barrier coats over incompatible primers or remove and re-prime. Notify Architect in writing about anticipated problems using the specified finish coat material with substrates primed by others.

E. Impervious Surfaces:
1. Remove mildew by scrubbing with solution of tri sodium phosphate and bleach.
2. Rinse with clean water and allow surface to dry.
F. Block/Unit Masonry (Cinder and Concrete)
1. Remove all loose mortar and foreign material.
2. Surface must be free of laitance, concrete dust, dirt, form release agents, moisture curing membranes, loose cement, and hardeners.
3. Let concrete and mortar cure at least 30 days at 75°F unless the manufactures products are designed for application prior to the 30-day period.
4. The pH of the surface and moisture content must be in accordance with the paint manufacturer's recommendations prior to painting.
G. Galvanized Surfaces:
1. Clean per SSPC-SP1 using detergent and water or a degreasing cleaner to remove greases and oils.
2. Apply a test area, priming as required.
3. Allow the coating to cure in accordance with the manufacturer's recommendation before testing.
4. Perform adhesion tests in accordance with ASTM 3359 Adhesion by Tape Test.
5. If adhesion is poor, then notify Owner's representative that additional surface preparation under another section is necessary to remove pre-treatments or contaminants that interfere with adhesion of the coating.
H. Plaster Cement Surfaces:
1. Shall allow to thoroughly dry for at least 30 days before painting unless the manufacturer's products are designed for application prior to the 30-day period.
2. Bare plaster must be cured and hard prior to painting.
3. Correct any soft, porous, or powdery plaster per requirements under another section of the specifications.
I. Steel:
1. Check other sections for additional surface preparation and shop priming of bare steel surfaces.
2. Surface preparation shall include appropriate SSPC recommended methods.
a. Shop primer shall be compatible with the field-applied coatings.
b. Surfaces shall be dry and clean prior to the application of field-applied coatings.
c. Remove all contaminants in accordance with SSPC-SP1 Solvent Cleaning or SSPC Method recommended for condition of substrate.
3.3 MATERIALS PREPARATION
A. Mix and prepare painting materials in accordance with manufacturer's directions.
B. Store materials not in actual use in tightly covered containers. Maintain containers used in storage, mixing, and application of paint in a clean condition, free of foreign materials and residue.
C. Stir materials before application to produce a mixture of uniform density and stir as required during application. Do not stir surface film into material. Remove film and, if necessary, strain material before using.
D. Use only thinners approved by the paint manufacturer and only within recommended limits.
E. Tinting: Tint each undercoat of lighter shade to facilitate identification of each coat where multiple coats of the same materials are applied. Tint undercoats to match the color of the finish coat but provide sufficient differences in shade of undercoats to distinguish each separate coat.
F. Surface preparation, priming, and finish coats specified in this section are in addition to shop priming surface treatment specified under other sections.

G. Preparation and testing of existing painted surfaces, indicated to be repainted to accommodate new work, shall be performed as work of this section.
3.4 APPLICATION
A. Apply paints according to manufacturer's written instructions and to recommendations in "MPI Manual."
B. Use applicators and techniques suited for paint and substrate indicated.
1. Paint front and backsides of access panels, removable or hinged covers, and similar hinged items to match exposed surfaces.
2. Do not paint over labels of independent testing agencies or equipment name, identification, performance rating, or nomenclature plates.
3. Primers specified in painting schedules may be omitted on items that are factory primed or factory finished if acceptable to topcoat manufacturers.
4. Tint each undercoat a lighter shade to facilitate identification of each coat if multiple coats of same material are to be applied. Tint undercoats to match color of topcoat but provide sufficient difference in shade of undercoats to distinguish each separate coat.
5. If undercoats or other conditions show through topcoat, apply additional coats until cured film has a uniform paint finish, color, and appearance.
6. Apply paints to produce surface films without cloudiness, spotting, holidays, laps, brush marks, roller tracking, runs, sags, ropiness, or other surface imperfections. Cut in sharp lines and color breaks.
7. Apply paint in a cross-hatch application to achieve an even coverage.

3.5 FIELD QUALITY CONTROL

A. The right is reserved by Owner/Architect to invoke the following material testing procedure in addition to other tests indicated when and as often as he deems necessary during the period of field painting.
B. Engage services of an independent testing laboratory to sample paint being used. Samples of materials delivered to project site will be taken, identified, and sealed, and certified in presence of Contractor.

C. Testing laboratory will perform appropriate tests for one or each of the following characteristics: Abrasion resistance, apparent reflectivity, flexibility, washability, absorption, accelerated weathering, dry opacity, accelerated yellowness, recoating, skinning, color retention, alkali resistance, and quantitative materials analysis.

D. A test patch for applied paint adhesion may be required.
1. Adhesion text shall provide the adhesion X-cut and tape test for adhesion per ASTM D3359 for areas selected by the Architect.
2. Areas found to be defective shall have paint removed and repainting shall be provided.
3. Owner/Architect may require retesting.

E. A test patch for adhesion may also be required. The procedure for the test patch is as follows:
1. An area that represents the worst condition of the existing paint is selected.
2. The surface is prepared as appropriate for the repaint work.
3. The new coating or coating system is applied.
4. The coating is allowed to cure for at least 7 days at 75 degrees F. or according to the coating manufacturer's instructions.
5. After proper curing the adhesion is tested using an acceptable method such as the Adhesion by Tape Test (ASTM D 3359).

F. If test results show that material being used does not comply with specified requirements, Contractor may be directed to stop painting work, and remove noncomplying paint; pay for testing; repaint surfaces coated with rejected paint; remove rejected paint from previously painted surfaces if, upon repainting with specified paint, the 2 coatings are noncompatible.
3.7 TOUCH-UP AND DAMAGE REPAIR

A. Contractor shall repair all deficiencies in coating application in accordance with PDCA Standard P1-04.
B. Inform Owner's representative of all damage to properly painted surfaces and receive authorization prior to performing damage repair.
END OF SECTION 09 91 13

SECTION 09 91 23 - INTERIOR PAINTING
PART 1 - GENERAL
1.1 WARRANTY

A. Contractor shall provide five (5) year warranty against defects in labor and installation of paint materials in the form indicated at the end of this section.
B. Manufacturer shall provide five (5) year warranty against defects in all paint products and materials incorporated into the work.
C. The manufacturer shall assume all responsibility for substrate acceptance and adhesion and to uphold the required warranty.
PART 2 - PRODUCTS
2.1 MANUFACTURERS

A. Acceptable Manufacturers

1. The painting schedule is based on products manufactured by the Sherwin-Williams Company.

B. Manufacturers: Subject to compliance with requirements, provide products by one of the following:

1. Sherwin-Williams Company
2. Benjamin Moore & Co.
3. Florida Paint
2.2 COMPATIBILITY

A. MPI Standards: Products shall comply with MPI standards indicated and shall be listed in its "MPI Approved Products Lists.
B. Paint materials and equipment shall be compatible in use; finish coats shall be compatible with prime coats; prime coats shall be compatible with the surface to be coated; tools and equipment shall be compatible with the coating to be applied.

1. Review other sections in which primers are provided to ensure compatibility of the total system for various substrates. On request, furnish information on characteristic of finish materials to ensure use of compatible primers.
2. For each coat in a paint system, products shall be recommended in writing by topcoat manufacturers for use in paint system and on substrate indicated.

C. Adhesion Test: Provide adhesion X-cut and tape test for primer adhesion per ASTM D3359 for every 200 s.f. of primed area.

D. Thinners, when used, shall be only those thinners recommended for that purpose by the manufacturer of the material to be thinned.

E. The term "paint," as used herein, includes enamels, paints, sealers, stains, fillers, emulsions, and other coatings, whether used as prime, intermediate, or finish coats.
2.3 PAINTING SCHEDULE

A. Masonry (CMU)

1. Latex Systems
a. Eggshell/Satin Finish
1st Coat: S-W Pro Industrial Heavy-Duty Block Filler, B42W150 at 75-100 sq/gallon - MPI#4
2nd Coat: S-W Harmony Low Odor Interior Latex Eg-Shel, B9 Series - MPI #144 X-Green
3rd Coat: S-W Harmony Low Odor Interior Latex Eg-Shel, B9 Series (1.6-mil dry per coat)

B. Metal - (Galvanized; Ceiling, Ductwork)

1. Dryfall Waterborne Systems
a. Eggshell Finish
1st Coat: S-W Pro Industrial Waterborne Acrylic Dry-Fall Eg-Shel, B42W82
2nd Coat: S-W Pro Industrial Waterborne Acrylic Dry-Fall Eg-Shel, B42W82 (1.9 - 2.9-mil dry per coat)

C. Metal - (Ferrous Metal)

1. Latex Systems
a. Eg-Shel/Satin Finish
1st Coat: S-W Pro Industrial Pro-Cryl® Universal Primer, B66W1300 Series (2.0 - 4.0-mil dry) - MPI#107
2nd Coat: S-W Pro Industrial DTM Acrylic Eg-Shel Coating, B66W1250 Series - MPI #151X-Green
3rd Coat: S-W Pro Industrial DTM Acrylic Eg-Shel Coating, B66W1250 Serie (2.5 - 4.0-mil dry per coat)

D. Drywall - Microbicidal

1. Latex System (Walls)
a. Eg-Shel Finish
1st Coat: S-W Premium Wall & Wood Primer, B28W8111 (1.8-mil dry) - MPI#N/A
2nd Coat: S-W Paint Shield Microbicidal Interior Latex Eg-Shel, D12W51 - MPI #N/A
3rd Coat: S-W Paint Shield Microbicidal Interior Latex Eg-Shel, D12W51 (1.8-mil dry)
b. Flat Finish (Ceiling)
1st Coat: S-W Premium Wall & Wood Primer, B28W8111 (1.8-mil dry) - MPI#N/A
2nd Coat: S-W Eminence High Performance Interior Latex, Flat, A27W02815, (1.2-mil dry)
3rd Coat: S-W) Eminence High Performance Interior Latex, Flat, A27W02815, (1.2-mil dry)

2.4 MATERIALS - GENERAL REQUIREMENTS

A. Paints and Coatings - General

1. Unless otherwise indicated, provide factory-mixed coatings.
2. When required, mix coatings to correct consistency in accordance with manufacturer's instructions before application.
3. Do not reduce, thin, or dilute coatings or add materials to coatings unless approved in manufacturer's product instructions.
4. Confirm VOC's need by using the products MSDS sheets.

B. Primers: Where the manufacturer offers options on primers for a particular substrate, use primer categorized as "best" by the manufacturer.
2.5 ACCESSORIES

A. Coating application accessories: Provide all primers, sealers, cleaning agents, cleaning cloths, sanding materials, and clean-up materials required, per manufacturer's specifications.
PART 3 - EXECUTION
3.1 EXAMINATION

A. Examine substrates and conditions, with Applicator present, for compliance with requirements for maximum moisture content and other conditions affecting performance of the Work.
B. Maximum Moisture Content of Substrates: When measured with an electronic moisture meter as follows (Do not apply finishes unless moisture content of surfaces is below the following maximums):
1. Masonry (Clay and CMUs): 12 percent.
2. Gypsum Board: 12 percent.
C. Verify suitability of substrates, including surface conditions and compatibility, with existing finishes and primers.
D. Proceed with coating application only after unsatisfactory conditions have been corrected.
1. Application of coating indicates acceptance of surfaces and conditions.
E. Do not begin application of coatings until substrates have been properly prepared; notify Owner's Representative of unsatisfactory conditions before proceeding.
F. If substrate preparation is the responsibility of another installer, notify Owner's Representative of unsatisfactory preparation before proceeding.
G. Do not paint over dirt, rust, scale, grease, moisture, scuffed surfaces, or conditions otherwise detrimental to formation of a durable paint film.
H. Test shop applied primer for compatibility with subsequent cover materials.

SEE SHEET A-704 FOR CONTINUATION OF SECTION 09 91 23 - INTERIOR PAINTING

HARVARD ● JOLLY
ARCHITECTURE
1639 Hendry St. Fort Myers Florida 33901 | 561-478-4457 | www.HarvardJolly.com | AAC000119

ESTERO ON THE RIVER
RESTROOM FACILITY
ESTERO ,FLORIDA
CONSTRUCTION DOCUMENTS

Comm. No.: 22031.01
Date: 09/08/2023
Drawn: BKL

Revisions

No.	Date	Note

TO THE BEST OF MY KNOWLEDGE, THE PLANS AND SPECIFICATIONS COMPLY WITH THE MINIMUM BUILDING CODES.

Architect of Record
License #

SPECIFICATIONS

A-703

SECTION 09 91 23 - INTERIOR PAINTING CONTINUED FROM SHEET A-703
3.2 PREPARATION
A. Comply with manufacturer's written instructions and recommendations in "MPI Architectural Painting Specification Manual" applicable to substrates and paint systems indicated.
B. Remove hardware, covers, plates, and similar items already in place that are removable and are not to be painted. If removal is impractical or impossible because of size or weight of item, provide surface-applied protection before surface preparation and painting. After completing painting operations, use workers skilled in the trades involved to reinstall items that were removed. Remove surface-applied protection if any.
C. Clean substrates of substances that could impair bond of paints, including dust, dirt, oil, grease, and incompatible paints and encapsulants. Remove incompatible primers and reprime substrate with compatible primers or apply tie coat as required to produce paint systems indicated.
D. The surface shall be dry and in sound condition. Remove all oil, dust, dirt, loose rust, peeling paint, or other contamination to ensure good adhesion.

E. Provide barrier coats over incompatible primers or remove and re-prime. Notify Architect in writing about anticipated problems using the specified finish coat material with substrates primed by others.

F. Impervious Surfaces:

1. Remove mildew by scrubbing with solution of tri sodium phosphate and bleach.
2. Rinse with clean water and allow surface to dry.

G. Block/Unit Masonry (Cinder and Concrete)

1. Remove all loose mortar and foreign material.
2. Surface must be free of laitance, concrete dust, dirt, form release agents, moisture curing membranes, loose cement, and hardeners.
3. Let concrete and mortar cure at least 30 days at 75°F unless the manufactures products are designed for application prior to the 30-day period.
4. The pH of the surface and moisture content must be in accordance with the paint manufacturer's recommendations prior to painting.

H. Drywall:

1. Shall be clean, dry and all dust removed prior to painting.
2. All nail heads must be set and spackled.
3. Tape all joints and cover with a joint compound.
4. Spackled nail heads and tape joints shall be sanded smooth.

I. Galvanized Surfaces:

1. Clean per SSPC-SP1 using detergent and water or a degreasing cleaner to remove greases and oils.
2. Apply a test area, priming as required.
3. Allow the coating to cure in accordance with the manufacturer's recommendation before testing.
4. Perform adhesion tests in accordance with ASTM 3359 Adhesion by Tape Test.
5. If adhesion is poor, then notify Owner's representative that additional surface preparation under another section is necessary to remove pre-treatments or contaminants that interfere with adhesion of the coating.

J. Steel:

1. Check other sections for additional surface preparation and shop priming of bare steel surfaces.
2. Surface preparation shall include appropriate SSPC recommended methods.
3. Shop primer shall be compatible with the field-applied coatings.
4. Surfaces shall be dry and clean prior to the application of field-applied coatings.
5. Remove all contaminants in accordance with SSPC-SP1 Solvent Cleaning or SSPC Method recommended for condition of substrate.
3.3 MATERIALS PREPARATION

A. Mix and prepare painting materials in accordance with manufacturer's directions.
B. Store materials not in actual use in tightly covered containers. Maintain containers used in storage, mixing, and application of paint in a clean condition, free of foreign materials and residue.
C. Stir materials before application to produce a mixture of uniform density and stir as required during application. Do not stir surface film into material. Remove film and, if necessary, strain material before using.
D. Use only thinners approved by the paint manufacturer and only within recommended limits.
E. Tinting: Tint each undercoat of lighter shade to facilitate identification of each coat where multiple coats of the same materials are applied. Tint undercoats to match the color of the finish coat but provide sufficient differences in shade of undercoats to distinguish each separate coat.
F. Surface preparation, priming, and finish coats specified in this section are in addition to shop priming surface treatment specified under other sections.

G. Preparation and testing of existing painted surfaces, indicated to be repainted to accommodate new work, shall be performed as work of this section.
3.4 APPLICATION

A. Apply paints according to manufacturer's written instructions and to recommendations in "MPI Manual."

B. Use applicators and techniques suited for paint and substrate indicated.

C. Paint surfaces behind movable equipment and furniture same as similar exposed surfaces. Before final installation, paint surfaces behind permanently fixed equipment or furniture with prime coat only.

D. Paint front and backsides of access panels, removable or hinged covers, and similar hinged items to match exposed surfaces.

E. Do not paint over labels of independent testing agencies or equipment name, identification, performance rating, or nomenclature plates.

F. Primers specified in painting schedules may be omitted on items that are factory primed or factory finished if acceptable to topcoat manufacturers.
G. If undercoats or other conditions show through topcoat, apply additional coats until cured film has a uniform paint finish, color, and appearance.
H. Apply paints to produce surface films without cloudiness, spotting, holidays, laps, brush marks, roller tracking, runs, sags, ropiness, or other surface imperfections. Cut in sharp lines and color breaks.
I. Apply paint in a cross-hatch application to achieve an even coverage.
3.5 FIELD QUALITY CONTROL

A. The right is reserved by Owner/Architect to invoke the following material testing procedure in addition to other tests indicated when and as often as he deems necessary during the period of field painting.

B. Engage services of an independent testing laboratory to sample paint being used. Samples of materials delivered to project site will be taken, identified, and sealed, and certified in presence of Contractor.

C. Testing laboratory will perform appropriate tests for one or each of the following characteristics: Abrasion resistance, apparent reflectivity, flexibility, washability, absorption, accelerated weathering, dry opacity, accelerated yellowness, recoating, skinning, color retention, alkali resistance, and quantitative materials analysis.

D. A test patch for applied paint adhesion may be required.
1. Adhesion test shall provide the adhesion X-cut and tape test for adhesion per ASTM D3359 for areas selected by the Architect.
2. Areas found to be defective shall have paint removed and repainting shall be provided.
3. Owner/Architect may require retesting.

E. A test patch for remedial painting adhesion may also be required. The procedure for the test patch is as follows:
1. An area that represents the worst condition of the existing paint is selected.
2. The surface is prepared as appropriate for the repaint work.
3. The new coating or coating system is applied.
4. The coating is allowed to cure for at least 7 days at 75 degrees F. or according to the coating manufacturer's instructions.
5. After proper curing the adhesion is tested using an acceptable method such as the Adhesion by Tape Test (ASTM D 3359).

F. If test results show that material being used does not comply with specified requirements, Contractor may be directed to stop painting work, and remove noncomplying paint; pay for testing; repaint surfaces coated with rejected paint; remove rejected paint from previously painted surfaces if, upon repainting with specified paint, the 2 coatings are noncompatible.

G. Reinstall electrical cover plates, hardware, light fixture trim, escutcheons, and fittings removed prior to finishing.
H. Painting Fire Suppression, Plumbing, HVAC, Electrical, Communication, and Electronic Safety and Security Work:
1. Paint the following work where exposed in equipment rooms:
a. Equipment, including both sides of panelboards.
b. Uninsulated metal and plastic piping.
c. Pipe hangers and supports.
d. Metal and plastic conduit.
2. Paint the following work where exposed in occupied spaces:
a. Equipment
b. Uninsulated metal and plastic piping.
c. Pipe hangers and supports.
d. Metal and plastic conduit.
e. Duct, insulation having cotton or canvas insulation covering or other paintable jacket material.
f. Remove unfinished louvers, grilles, covers, and access panels on mechanical and electrical components and paint separately.
g. Interior surfaces of air ducts that are visible through grilles and louvers with one coat of flat black paint.
h. Paint dampers exposed behind louvers and grilles to match face panels.
i. Other items as directed by Architect.
END OF SECTION 09 91 23

SECTION 10 21 15 - PHENOLIC CORE TOILET COMPARTMENTS
PART 1 - GENERAL
1.10 WARRANTY

A. Warranty: Manufacturer's standard three (3) year limited warranty for panels, doors, and stiles against breakage, corrosion, delamination, and defects in factory workmanship.
B. Manufacturer's standard three (3) year guarantee against defects in material and workmanship for door hardware and mounting brackets.
1.12 PERFORMANCE
A. Comply with requirements in GSA's CID-A-A-60003, "Partitions, Toilets, Complete."
B. Surface-Burning Characteristics: Comply with ASTM E 84; testing by a qualified testing agency. Identify products with appropriate markings of applicable testing agency.
1. Fire hazard classification: Class A flame spread/smoke developed rating, tested to ASTM E84.
A. Regulatory Requirements: Comply with applicable provisions in the U.S. Architectural & Transportation Barriers Compliance Board's ADA-ABA Accessibility Guidelines for Buildings and Facilities for toilet compartments designated as accessible.
PART 2 - PRODUCTS
2.1 MANUFACTURER

A. Manufacturer and basis of design shall be the following however products of other manufacturers will be considered for acceptance provided they equal or exceed the material requirements and functional qualities of the specified product and acceptance is provided by the Architect in writing prior to bidding.

1. Bradley Corporation.

B. The following manufacturers are acceptable provided they equal or exceed the material requirements and functional qualities of the basis of design product.

1. General Partitions.
2. Sani America.
2.2 GENERAL

A. Basis of Design: "Mills Partitions, Sentinel, Series 400"

B. Phenolic Core: Compressed cellulose impregnated with phenolic resins. Provide smooth material, without creases or ripples.
C. Door, Panel, and Pilaster Construction, General: Form edges with 15-degree bevel without crown molding. Finish edges smooth.
1. Provide exposed surfaces free of pitting, visible seams and fabrication marks, stains, telegraphing of core material, or other imperfections.
2. Core Material: Manufacturer's standard solid resin core of thickness required to provide finished thickness for doors, panels and pilasters.

D. Design Type: Standard height with door and panel height of 58 inches with floor clearance of 12 inches.
E. Door Construction: 3/4 inch thick.
F. Panel Construction: 1/2 inch thick.
G. Pilaster Construction: 3/4 inch thick.
1. Provide pilaster with mechanically fastened leveling bar reinforcement with zinc-plated jack bolt for leveling.
H. Headrail: Extruded anodized aluminum headrail with anti-grip profile. Provide clamps for attachment to pilaster and stainless steel brackets to secure to wall.
I. Shoes: 4 inches high minimum, Type 304 stainless steel with No. 4 satin brushed finish. Provide concealed retainer clips to attach to pilaster.
J. Urinal-Screen Construction: Matching toilet compartment panel construction
2.3 PARTITIONS

A. Design Type: Standard height with door and panel height of 55 inches with floor clearance of 14 inches.

B. Mounting Type: Floor-mounted, overhead-braced with pilaster height of 82 inches.

2.4 URINAL SCREENS

A. Basis of Design: "Mills Partitions, Model No. 5"

B. Type: Wall mounted screen 48 inches high by 18 inches deep with floor clearance of 14 inches. Provide pilaster.

C. Urinal Wall Bracket: Full panel height, aluminum double ear continuous full panel height U-bracket, fastened with stainless steel tamper resistant Torx head sex bolts.
2.5 COMPONENTS

A. Pilaster Shoes: 3 inches high, 20 gage stainless steel, secured to pilaster with stainless steel tamper resistant Torx head sex bolt.

B. Wall Brackets: 54 inches long, stainless steel double flange continuous U-bracket, fastened to pilasters and panels with stainless steel tamper resistant Torx head sex bolts.

C. Urinal Wall Bracket: 48 inches long, stainless steel double flange continuous U-bracket, and wing brackets with stainless steel tamper resistant Torx head sex bolts.

D. Overhead Brace: Heavy-duty extruded aluminum, anti-grip design, clear anodized finish, fastened to headrail bracket with stainless steel tamper resistant Torx head sex bolt and at top of pilaster with stainless steel tamper resistant Torx head screws.

E. Headrail Brackets: 20 gage stainless steel, satin finish, secured to wall with stainless steel tamper resistant Torx head screws.
2.6 HARDWARE

A. Hardware and Accessories: Manufacturer's standard design, heavy-duty operating hardware and accessories.

B. Anchorages and Fasteners: Manufacturer's standard exposed fasteners of stainless steel, finished to match the items they are securing, with theft-resistant-type heads. Provide sex-type bolts for through-bolt applications. For concealed anchors, use stainless steel.
C. Hardware, Heavy Duty: Manufacturer's heavy-duty stainless steel castings, including stainless steel tamper-resistant fasteners:
1. Hinges: Self-closing surface mounted, through bolted, with gravity cams, adjustable to hold doors open at any angle up to 90 degrees, with emergency access by lifting door. Mount with stainless steel through-bolts.
2. Latch and Keeper: Surface-mounted slide latch with flat rubber-faced combination door strike and keeper, with provision for emergency access, meeting requirements for accessibility at accessible compartments.
3. Coat Hook: Combination hook and rubber-tipped stop, sized to prevent door from hitting compartment-mounted accessories. Provide wall bumper where door abuts wall. Provide formed L-shaped hook without stop at outswing doors. Mount with stainless steel through-bolts.
4. Door Pull: Standard unit on outside of inswing doors. Provide pulls on both sides of outswing doors.
2.7 MATERIALS
A. Stainless Steel Sheet: ASTM A 240 or A 666, 300 series.
B. Stainless Steel Castings: ASTM A 743/A 743M.
C. Aluminum: ASTM B 221.
2.8 FABRICATION
A. Fabrication, General: Fabricate toilet compartment components to sizes indicated. Coordinate requirements and provide cutouts for through-partition toilet accessories where required for attachment of toilet accessories.
B. Overhead-Braced Units: Provide manufacturer's standard corrosion-resistant supports, leveling mechanism, and anchors at pilasters to suit floor conditions. Provide shoes at pilasters to conceal supports and leveling mechanism.
C. Door Size and Swings: Unless otherwise indicated, provide 26-inch wide, in-swinging doors for standard toilet compartments and wide, out-swinging doors with a minimum 32-inch wide, clear opening for compartments designated as accessible.
2.9 FINISH
A. Color and Pattern: Color and pattern as selected by Architect from manufacturer's full range.
PART 3 - EXECUTION
3.1 EXAMINATION
A. Examine areas and conditions, with Installer present, for compliance with requirements for fastening, support, alignment, operating clearances, and other conditions affecting performance of the Work.
1. Confirm location and adequacy of blocking required for installation.
B. Proceed with installation only after unsatisfactory conditions have been corrected.
3.2 INSTALLATION

A. General: Comply with manufacturer's written installation instructions. Install units rigid, straight, level, and plumb. Secure units in position with manufacturer's recommended anchoring devices.

1. Maximum Clearances:
a. Pilasters and Panels: 1/4 inch.
b. Panels and Walls: 1/4 inch.
2. Stirrup Brackets: Secure panels to pilasters with no fewer than three brackets attached at midpoint and near top and bottom of panel.
a. Locate wall brackets so holes for wall anchors occur in masonry or tile joints.
b. Align brackets at pilasters with brackets at walls.

B. Overhead-Braced Units: Secure pilasters to floor and level, plumb, and tighten. Set pilasters with anchors penetrating not less than 1-3/4 inches into structural floor unless otherwise indicated in manufacturer's written instructions. Secure continuous head rail to each pilaster with no fewer than two fasteners. Hang doors to align tops of doors with tops of panels, and adjust so tops of doors are parallel with overhead brace when doors are in closed position.
C. Urinal Screens: Attach with anchoring devices to suit supporting structure. Set units level and plumb, rigid, and secured to resist lateral impact.
3.3 ADJUSTING

A. Hardware Adjustment: Adjust and lubricate hardware according to hardware manufacturer's written instructions for proper operation. Set hinges on in-swinging doors to hold doors open approximately 30 degrees from closed position when unlatched. Set hinges on out-swinging doors to return doors to fully closed position.
END OF SECTION 10 21 15

10 26 00 Wall Protection Board

Part 2 - Products

2.01 Manufacturers
A. Interior surface protection products specified herein and included on the submittal drawings shall be manufactured by Construction Specialties, Inc., 3 Werner Way, Lebanon, NJ 08833 USA 800-233-8493; email: cet@c-sgroup.com
B. Products from approved equal will be considered by the Architect only prior to bid.
C. Drawings and specifications are based on manufacturer's literature from Construction Specialties, Inc. drawings and specifications unless otherwise indicated. Other manufacturers must be approved equal by Architect/Owner.

2.02 Materials
A. Engineered PVC FREE: Rigid sheet should be high-impact Acrovyn 4000 with standard Suede texture. Chemical and stain resistance should be per ASTM D543 standards as established by the manufacturer.
1. Nominal Thickness: .075" (1.91 mm)
B. Aluminum: aluminum trims to be alloy 6063 T5 with clear or colored anodized finish; minimum strength and durability properties as specified in ASTM B221.
C. Cured ColorFlex® II Bacteria Resistant Caulk has a Shore A value of greater than 55 (product considered "pick-resistant" based on industry standards) testing conducted by independent lab in accordance with ASTM C661 and ASTM C920.
D. Acrovyn trim .075" (1.91 mm) thickness. Visible trim width is 3/8" (9.53mm).

2.03 Wall Covering (Restrooms)
A. Engineered PVC FREE rigid sheet to be CS Acrovyn:
1. Sheet Size:
a) Barrwood Texture shall be 43" x 114" (1.1m x 2.3m or 2.9m).

2. Finishe: Acrovyn™ Woodgrains sheet size is 4' x 10' (1.2m x 3.0); pattern direction runs parallel to 10' (3.0m) side of sheet.
a) Colors to be indicated in the finish schedule from one of manufacturer's available colors and patterns.
3. Color-matched caulk as needed for joints/transitions.
2.04
A. Engineered PETG Corner Guards to be CS Acrovyn: Surface mounted guards consisting of continuous retainer with snap-on Acrovyn 4000 cover. Color matched end caps to be provided for both partial and full height applications. Attachment hardware shall be appropriate for wall construction.
B. Model SM-10N 90° surface mounted corner guard with 1" (25.4mm) radius bullnose cover and aluminum retainer.

2.05 Fabrication
A. General: Fabricate wall covering to comply with requirements indicated for design, dimensions, detail, finish and sizes.

2.06 Finishes
A. General: Comply with NAAMM "Metal Finishes Manual" for recommendations relative to applications and designations of finishes.

2.07 Accessories
A. Adhesive and Primer: Acrovyn wall covering shall be furnished as a complete packaged system, including appropriate standard adhesive.
B. Bacteria Resistant caulk and trims: ColorFlex II bacteria resistant caulk, used to cover seams in Acrovyn sheet installation, is resistant to bacteria/mold when subjected to ASTM G21 & ASTM G22 requirements.

Part 3 - Execution
3.01 Examination
A. Verification of conditions: Examine areas and conditions under which work is to be performed and identify conditions detrimental to proper or timely completion.
1. Do not proceed until unsatisfactory conditions have been corrected.

3.02 Preparation
A. Surface preparation: Prior to installation, clean substrate to remove dirt, debris and loose particles. Perform additional preparation procedures as required by manufacturer's instructions. Minimum Level 3 wall finish is required; for surfaces with Level 5 finish, ensure the surface and any surface coatings are fully dry and cured.
B. Protection: Take all necessary steps to prevent damage to material during installation as required in manufacturer's installation instructions.
C.
D. Protection: Take all necessary steps to prevent damage to material during installation as required in manufacturer's installation instructions.

3.03 Installation
A. Install the work of this section in strict accordance with the manufacturer's recommendations using approved adhesive. Note there are special installation instructions for non-standard conditions: radius walls, tile, CMU block, etc.
B. Temperature at the time of installation must be between 65-75°F (18-24°C) and be maintained for at least 48 hours after the installation to allow for proper adhesive set-up.
C. Relative humidity shall not exceed 80%.
D. Do not expose wall covering to direct sunlight during or after installation. This will cause the surface temperature to rise, which in turn will cause bubbles and delamination.

3.04 Cleaning
A. General: Immediately upon completion of installation, clean material in accordance with manufacturer's recommended cleaning method.
B. Remove surplus materials, rubbish and debris resulting from installation as work progresses and upon completion of work.

3.05 Protection
A. Protect installed materials to prevent damage by other trades. Use materials that may be easily removed without leaving residue or permanent stains.

End OF Section

SECTION 10 28 00 - TOILET ACCESSORIES
PART 1 - GENERAL
1.1 WARRANTY
A. Toilet Accessory Warranty: Provide manufacturer's one (1) year warranty from the Date of Substantial Completion, against defects in material and workmanship, unless otherwise indicated.
B. Mirror Warranty: Submit a written warranty executed by mirror manufacturer, agreeing to replace any mirrors that develop visible silver spoilage defects within 15 years from the Date of Substantial Completion.
1.2 PERFORMANCE REQUIREMENTS
A. Electrical Components, Devices, and Accessories: Listed and labeled as defined in NFPA 70, by a qualified testing agency, and marked for intended location and application.
PART 2 - PRODUCTS
2.1 MANUFACTURERS
A. Manufacturer and basis of design shall be the following however products of other manufacturers will be considered for acceptance provided they equal or exceed the material requirements and functional qualities of the specified product and acceptance is provided by the Architect in writing prior to bidding.
1. Bobrick
2. Manufacturers listed in the schedule on the drawings.
B. The following manufacturers are acceptable provided they equal or exceed the material requirements and functional qualities of the basis of design product.
1. Bradley Corporation
2. American Specialties, Inc.
3. AJW Architectural Products
2.2 UNDERLAVATORY GUARDS
A. Underlavatory Guard:
1. Description: Insulating pipe covering for supply and drain piping assemblies that prevents direct contact with and burns from piping; allow service access without removing coverings. To be provided at all exposed piping. Provide Truebro Lav Guard 2 as manufacturer by IPS Corp.
2. Material and Finish: Antimicrobial, molded plastic, white.
2.3 KEYING
A. Supply four keys for each accessory to Owner.
B. Provide a master-key system for all accessories.
2.4 FINISHES
A. Galvanizing ASTM A123 to 1.25-oz/sq yd Galvanize ferrous metal and fastening devices.
B. Shop Primed Ferrous Metals: Pre-treat and clean, spray apply one coat primer and bake.
C. Enamel: Pre-treat to clean condition, apply one-coat primer and minimum two-coat epoxy baked enamel.
D. Chrome/Nickel Plating: ASTM B456, Type SC 2 satin finish.
E. Stainless Steel: No. 4 satin luster finish.
F. Back paint components where in contact with building finishes helping resist electrolysis.
PART 3 - EXECUTION
3.1 INSTALLATION
A. Install toilet accessory units according to manufacturers' instructions, using fasteners appropriate to substrate as recommended by unit manufacturer. Install units plumb and level, firmly anchored in locations and at heights indicated.
B. Secure mirrors to walls in concealed, tamperproof manner with special hangers, toggle bolts, or screws. Set units plumb, level, and square at locations indicated, according to Manufacturer's instructions for type of substrate involved.
C. Install grab bars to withstand a downward load of at least 250 lbf, complying with ASTM F446.
D. Provide all items and accessories as required for a complete and total installation in every respect, whether or not specified or indicated on the drawings.
3.2 ADJUSTING AND CLEANING
A. Adjust toilet accessories for proper operation and verify that mechanisms function smoothly. Replace damaged or defective items
B. Clean and polish all exposed surfaces strictly according to manufacturer's recommendations after removing temporary labels and protective coatings.
SCHEDULE SEE DRAWINGS
A. General Schedule Notes
1. Soap Unit to be secured to wall above lavatory with two screws. Exact location shall be indicated by Architect at the time of installation. Coordinate the location of this dispenser so that no conflict occurs at either the wall mounted mirror above the lavatory or the faucet assembly mounted on the deck of the lavatory.
2. Provide towel dispenser and soap dispenser at each sink location in addition to restrooms.
3. Coordinate bottom opening towel dispenser with wall cabinets above so conflict occurs when dispenser is opened to load towels.
4. One (1) mop holder shall be provided at each custodial sink and mounted at 60" AFF.
END OF SECTION 10 28 00

SECTION 12 48 12 – ENTRANCE FLOOR MATS
PART 1 - GENERAL
1.1 SUMMARY
A. Section Includes:

1. Provide labor, materials, services, and equipment necessary to furnish and install work as indicated and as specified herein, which includes, but is not limited to:
a. Surface-type roll-up entrance mats.
1.2 FIELD MEASUREMENTS

A. Verify that field measurements are as indicated on shop drawings.
PART 2 - PRODUCTS

2.1 MANUFACTURERS

A. Manufacturer shall be the following however products of other manufacturers will be considered for acceptance provided they equal or exceed the material requirements and functional qualities of the specified product.
1. Forbo Entrance Systems Flooring, Inc.
2.2 ENTRANCE MAT SYSTEMS
A. Basis of Design: Provide "Coral" Mats Entrance System"
B. Vinyl edge accessories to accommodate mat application as indicated per manufacturer.
C. Provide at Restroom entrances.
D. All entrance mats are to provide 6'-0" minimum travel length.
E. Style: As selected by the Architect.
F. Color: As selected by the Architect from the manufacturer's standard color palette. Provide samples for approval.
G. Mat size shall be 6'-0" deep by door width as shown on the drawings plus 6" in width.
H. The Contractor is to verify quantity of mats to be provided.
2.3 MATERIALS AND FABRICATION

A. General: Provide colors/patterns/profiles of materials, including metals and metal finishes, as indicated on drawings or by this specification or, where not indicated, as selected by Architect from manufacturer's standard colors/patterns/profiles.

B. Shop-fabricate the entrance mat work to greatest extent possible, in sizes as indicated on plans.

C. Where not otherwise indicated, provide single unit for each mat installation, but do not exceed manufacturer's maximum size recommendation for units intended for removal and cleaning.

D. Where joints in mats are necessary, space them symmetrically and away from normal traffic lanes.

E. Miter corner joints in framing elements, with hairline joints, or provide prefabricated corner units without joints.

F. Where possible, verify sizes by field measurement prior to shop fabrication.
PART 3 - EXECUTION

3.1 INSTALLATION

A. Install surface-type units to comply with manufacturer's instructions, at locations indicated and coordinated with entrance locations and traffic patterns.
1. Anchor the fixed surface type frame members to floor with devices spaced as recommended by manufacturer.

END OF SECTION 12 48 12

HARVARD ● JOLLY
ARCHITECTURE
1639 Hendry St. Fort Myers Florida 33901 | 561-478-4457 | www.HarvardJolly.com | AAC000119

ESTERO ON THE RIVER
RESTROOM FACILITY
ESTERO ,FLORIDA
CONSTRUCTION DOCUMENTS

Comm. No:	22031.01
Date:	09/08/2023
Drawn:	BKL

Revisions

No.	Date	Note

TO THE BEST OF MY KNOWLEDGE, THE PLANS AND SPECIFICATIONS COMPLY WITH THE MINIMUM BUILDING CODES.

Architect of Record
Licence #

SPECIFICATIONS

A-704

SPECIFICATIONS

MECHANICAL REQUIREMENTS:

DO ALL WORK IN COMPLIANCE WITH ALL APPLICABLE CODES, LAWS AND ORDINANCES, THE STANDARD BUILDING CODE AND THE REGULATIONS OF THE LOCAL UTILITY COMPANIES. OBTAIN AND PAY FOR ANY AND ALL REQUIRED PERMITS, INSPECTIONS, CERTIFICATES OF INSPECTIONS.

COOPERATE WITH OTHER TRADES AND CONTRACTORS AT JOB. PERFORM WORK IN SUCH MANNER AND AT SUCH TIMES AS NOT TO DELAY WORK OF OTHER TRADES.

OBTAIN MANUFACTURER'S DATA ON ALL EQUIPMENT, THE DIMENSIONS OF WHICH MAY AFFECT INSTALLATION. USE THIS DATA TO COORDINATE PROPER SERVICE CHARACTERISTICS, ENTRY LOCATIONS, ETC. TO ENSURE MINIMUM CLEARANCES ARE MAINTAINED.

WORKMAN SHALL BE EXPERIENCED IN THEIR RESPECTIVE TRADE. WORKMANSHIP OF INSTALLED WORK SHALL BE FIRST CLASS AND WILL BE SO JUDGED. SUBSTANDARD WORK SHALL BE REMOVED AND REPLACED AT CONTRACTOR'S EXPENSE.

CONTRACTOR SHALL AND DOES HEREBY WARRANT ALL MATERIALS AND EQUIPMENT FURNISHED UNDER THIS SECTION TO BE FREE FROM DEFECTS AND TO FUNCTION OR OPERATE SATISFACTORILY FOR ONE YEAR AFTER FINAL ACCEPTANCE OF THE WORK, AND THAT ANY ITEMS NOT MEETING THIS REQUIREMENT WILL BE MADE GOOD BY HIM WITHOUT ANY COST TO THE OWNER.

PROVIDE ONLY NEW, STANDARD FIRST-GRADE MATERIALS THROUGHOUT, CONFORMING TO STANDARDS ESTABLISHED BY UNDERWRITER LABORATORIES INC., ANS SO MARKED AND LABELED, TOGETHER WITH MANUFACTURER'S BRAND OR TRADEMARK. ALL LIKE ITEMS SHALL BE OF ONE MANUFACTURER.

ALL WORK SHALL BE EXECUTED IN A MANNER THAT SHALL PRESENT A NEAT APPEARANCE UPON COMPLETION. CARE SHALL BE EXERCISED THAT ALL ITEMS ARE PLUMB, STRAIGHT AND LEVEL.

UPON COMPLETION OF WORK, ALL SYSTEMS SHALL BE TESTED, AND SHALL BE SHOWN TO BE IN PERFECT WORKING CONDITION IN ACCORDANCE WITH THE INTENT OF THE DRAWINGS.

ANY WALLS, CEILINGS, EQUIPMENT, ETC., DAMAGED BY THE CONTRACTOR IN CONSTRUCTION OF THIS PROJECT SHALL BE REPAIRED, RESTORED AND/OR REPLACED BY THE CONTRACTOR TO ITS ORIGINAL CONDITION, OR TO PERFORM ITS INTENDED FUNCTION, AT NO ADDITIONAL COST TO OWNER.

ALL PIPING AND DUCTS SHALL BE CONCEALED ABOVE CEILINGS WHERE APPLICABLE. ALL PIPING SHALL BE INSTALLED PARALLEL AND PERPENDICULAR TO THE BUILDING WALLS.

DUCTWORK:

ALL DUCTWORK MATERIALS AND INSTALLATION SHALL CONFORM TO APPLICABLE STATE, COUNTY AND LOCAL CODES. DUCTWORK SHALL BE ALL NEW AND IN GOOD CONDITION.

DUCT DIMENSIONS NOTED ARE INSIDE DIMENSIONS AND DO NOT INCLUDE INSULATION OR LINER(IF SPECIFIED).

DUCTWORK SHALL BE INSTALLED TO AVOID CONFLICT WITH OTHER TRADES. ANY OFFSETS REQUIRED SHALL BE INSTALLED AT NO ADDITIONAL COST.

A. GENERAL AIR MOVING SYSTEMS: DUCTWORK SHALL BE CONSTRUCTED OF GALVANIZED SHEET METAL UNLESS OTHERWISE INDICATED AND SHALL COMPLY WITH SMACNA PRESSURE CLASSIFICATION.

B. MINIMUM REQUIREMENTS: UNLESS OTHERWISE INDICATED ALL DUCTWORK SHALL COMPLY WITH THE FOLLOWING MINIMUM PRESSURE REQUIREMENTS:

1. TWO INCH W.G. PRESSURE: FROM THE SUPPLY FAN DISCHARGE TO A ROOM SUPPLY AIR DEVICE.
2. ONE INCH W.G. PRESSURE: RETURN AIR/ OUTDOOR AIR DUCTWORK.
3. ONE INCH W.G. PRESSURE: EXHAUST AIR DUCTWORK.

DUCT INSULATION:

ALL SUPPLY, RETURN AND OUTSIDE AIR DUCTS SHALL BE EXTERNALLY INSULATED UNLESS SPECIFICALLY INDICATED TO BE INTERNALLY INSULATED, EXTENDING FROM FAN, THROUGHOUT SYSTEM, TO ALL OUTLETS. UNLESS OTHERWISE INDICATED, EXTERNAL INSULATION SHALL BE MINIMUM 2-INCH THICK FIBERGLASS DUCT WRAP WHERE CONCEALED AND 1-INCH THICK SEMI-RIGID FIBERGLASS BOARD INSULATION (W/VAPOR BARRIER) WHERE EXPOSED.

AIR DISTRIBUTION DEVICES:

ALL AIR DEVICES SHALL BE ALL ALUMINUM CONSTRUCTION.
AIR DEVICES SHALL BE COMPATIBLE WITH THE CEILING/WALL TYPE WHERE INSTALLED.

REFRIGERANT PIPING:

PROVIDE REFRIGERANT GRADE PIPE, FITTINGS AND ACCESSORIES SIZED AND INSTALLED IN ACCORDANCE WITH THE EQUIPMENT MANUFACTURERS REQUIREMENTS. INSULATE ALL PIPING WITH MINIMUM 3/4" ELASTOMERIC INSULATION. PROVIDE ALUMINUM JACKETING ON THE EXTERIOR EXPOSED PIPE INSULATION

CONDENSATE PIPING:

PROVIDE SCHEDULE 40 PVC PIPE AND SOLVENT JOINT FITTINGS FOR AIR-CONDITIONING CONDENSATE DRAINAGE.

TEST AND BALANCE:

CONTRACTOR SHALL BE CERTIFIED BY NATIONAL ENVIRONMENTAL BALANCING BUREAU (NEBB) OR BY ASSOCIATED AIR BALANCE COUNCIL (AABC).

TEST AND BALANCE ALL AIR SYSTEMS IN ACCORDANCE WITH AABC AND/OR NEBB REQUIREMENTS. ALL EQUIPMENT USED FOR TESTING SHALL BE IN PROPER WORKING ORDER.

THE CONTRACTOR SHALL REGULATE AND ADJUST ALL SPLITTERS, DEFLECTORS AND DAMPERS SO THAT THE INLET OR OUTLET SHALL DELIVER OR REMOVE THE REQUIRED NUMBER OF CUBIC FEET OF AIR PER MINUTE (CFM) AT THE RESPECTIVE OPENINGS.

ALL TESTS SHALL BE CONDUCTED IN THE PRESENCE OF THE CONSTRUCTION SUPERINTENDENT, OR HIS REPRESENTATIVE.

THE CONTRACTOR SHALL FURNISH ALL INSTRUMENTS, TESTING EQUIPMENT AND PERSONNEL THAT MAY BE REQUIRED FOR THE TESTS.

VIBRATION AND NOISE:

PROVIDE NEOPRENE VIBRATION ISOLATORS UNDER GRADE MOUNTED CONDENSING UNIT CU-1.
PROVIDE SPRING ISOLATORS FOR SUSPENDED EQUIPMENT SUCH AS AHU-1 AND EF-1.

TEMPERATURE CONTROLS:

PROVIDE A BASIC CONTROL SYSTEM TO INCLUDE A PROGRAMMABLE THERMOSTAT FOR MAINTAINING GENERAL SPACE TEMPERATURE AND A CONTROL BOX OR PANEL HOUSING RIB RELAYS, WIRING, ETC. TO INTEGRATE THE AHU/CU OPERATION, INTERLOCK AUXILIARY DEVICES AND EQUIPMENT SUCH AS MOTORIZED O/A DAMPER AND EXHAUST FAN.

THE PROGRAMMING SHALL BE SET FOR OCCUPIED HOURS TO MAINTAIN TEMPERATURE BETWEEN 68 AND 78F. IN OCCUPIED MODE, THE MOTORIZED VOLUME DAMPER MVD SHALL OPEN TO ITS FULL OPEN POSITION, AHU-1 AND EF-1 SHALL RUN CONTINUOUSLY, AND CU-1 SHALL TURN ON AND OFF TO PROVIDE REQUIRED COOLING IN SUMMER MONTHS AND THE ELECTRIC HEATER AT AHU DISCHARGE SHALL ENERGIZE ON AND OFF TO PROVIDE REQUIRED COOLING IN WINTER MONTHS.

DURING UNOCCUPIED HOURS, THE MVD SYSTEMS SHALL REMAIN CLOSED AND THE HVAC EQUIPMENT SHALL REMAIN DE-ENERGIZED.

GENERAL NOTES:

1. COORDINATE LOCATION OF ALL AIR DISTRIBUTION DEVICES WITH ARCHITECTURAL AND STRUCTURAL WORK.
2. ALL EQUIPMENT SHALL BE INSTALLED PER MANUFACTURER'S RECOMMENDATIONS. VERIFY ALL REQUIREMENTS WITH EQUIPMENT SUPPLIED.
3. ALL DUCTWORK WILL BE EXPOSED. NO FLEXIBLE DUCT SHALL BE USED. ALL DUCTWORK SHALL BE RIGID.
4. ALL EQUIPMENT HOUSINGS AND COMPONENTS INSTALLED OUTDOORS THAT ARE EXPOSED TO THE ELEMENTS SHALL BE PROVIDED WITH SEACOAST APPLICATION. ANY APPLIED CORROSION RESISTANT MATERIALS SHALL BE FACTORY APPLIED.
5. ALL EXTERIOR MECHANICAL EQUIPMENT AND THEIR FRAMES, APPURTENANCES, COMPONENTS, SUPPORTS AND ANCHORING DEVICES SHALL BE ANCHORED TO RESIST THE FORCES DUE TO WIND PRESSURE AS NOTED IN FLORIDA BUILDING CODE.
6. DUCTWORK LAYOUTS INDICATED ON PLANS ARE DIAGRAMMATIC AND ARE NOT INTENDED TO BE USED AS DUCT FABRICATION DRAWINGS. THE CONTRACTOR IS RESPONSIBLE FOR ALL COORDINATION EFFORTS BETWEEN TRADES AS OUTLINED IN THE SPECIFICATIONS.
7. EVERY PIECE OF MECHANICAL EQUIPMENT SHALL BE PROVIDED WITH AN ENGRAVED NAMEPLATE WITH 1" LETTERS INDICATING EQUIPMENT DESIGNATIONSUCH AS AHU-1, CU-1, EF-1, ETC.
8. ALL MECHANICAL EQUIPMENT REQUIRING CONTROL INTERLOCK SHALL BE PROVIDED WITH A MAGNETIC ACROSS-THE-LINE HOA STARTER WITH PILOT LIGHTS.
9. ALL MOTOR STARTERS REQUIRED FOR MECHANICAL SYSTEM MOTORS SHALL BE PROVIDED BY THE MECHANICAL CONTRACTOR.
10. THE GENERAL CONTRACTOR AND MECHANICAL CONTRACTOR SHALL THOROUGHLY COORDINATE ALL OPENINGS REQUIRED @ WALLS FOR DUCTWORK AND PIPING.
11. MOUNT SPACE TEMPERATURE SENSOR/CONTROLLER AT 48" ABOVE FINISHED FLOOR, OR AT THE SAME HEIGHT AS THE LIGHT SWITCHES IN THE ROOM.
12. THE FINISHES OF ALL MECHANICAL EQUIPMENT, DUCTWORK, GRILLES, ETC. EXPOSED IN OCCUPIED SPACES OR ON THE EXTERIOR OF THE BUILDINGS SHALL BE CONFIRMED WITH THE ARCHITECT.
13. ALL DUCTWORK AND PIPING AT CEILING SHALL BE SUPPORTED FROM THE ROOF FRAMING STRUCTURE.

ABBREVIATIONS

SYMBOL	DESCRIPTION
AFF	ABOVE FINISHED FLOOR
AFMS	AIR FLOW MEASURING STATION
AHU	AIR HANDLING UNIT
AI	ANALOG INPUT (VARIABLE)
ALT	ALTERNATE
AO	ANALOG OUTPUT (VARIABLE)
APPROX	APPROXIMATE
ARCH	ARCHITECT
AVG	AVERAGE
BFF	BELOW FINISHED FLOOR
BFG	BELOW FINISHED GRADE
BFP	BACKFLOW PREVENTER
BHP	BREAK HORSEPOWER
BI	BINARY INPUT (ON-OFF)
BLDG	BUILDING
BMS	BUILDING MANAGEMENT SYSTEM
BO	BINARY OUTPUT (ON-OFF)
BOD	BOTTOM OF DUCT
BOP	BOTTOM OF PIPE
BTU	BRITISH THERMAL UNIT
BTUH	BRITISH THERMAL UNIT PER HOUR
C	CENTERLINE
CFM	CUBIC FEET PER MINUTE
CHWR	CHILLED WATER RETURN
CHWS	CHILLED WATER SUPPLY
CONC	CONCENTRIC
CONT	CONTINUATION
CU FT	CUBIC FEET
CU IN	CUBIC INCH
DB	DRY BULB TEMPERATUR
DDC	DIRECT DIGITAL CONTRO
DEG	DEGREE
DIA	DIAMETER
DIM	DIMENSION
DIP	DUCTILE IRON PIPE
DN	DOWN
DP	DIFFERENTIAL PRESSURE
DWG	DRAWING
EA	ENTERING AIR TEMPERATURE
ECC	ECCENTRIC
EDH	ELECTRIC DUCT HEATER
EFF	EFFICIENCY
EG	EXHAUST GRILLE
EL	EXHAUST LOUVER
ELEV	ELEVATION
EMS	ENERGY MANAGEMENT SYSTEM
ENT	ENTERING
EQUIP	EQUIPMENT
ERV	ENERGY RECOVERY VENTILATOR
EWT	ENTERING WATER TEMPERATURE
EXH	EXHAUST
EXP	EXPANSION
F	FAHRENHEIT
F/SD	FIRE/SMOKE DAMPER
FA	FIRE ALARM
FCU	FAN COIL UNIT
FD	FIRE DAMPER
FDC	FLEXIBLE DUCT CONNECTION
FLEX	FLEXIBLE
FLR	FLOOR
FMCS	FACILITY MANAGEMENT CONTROL SYSTEM
FO	FLAT OVAL
FPM	FEET PER MINUTE
FT	FEET
GA	GAUGE
GAL	GALLONS
GALV	GALVANIZED
GC	GENERAL CONTRACTOR
GPM	GALLONS PER MINUTE
H	HUMIDITY
HD	HEAD
HDG	HOT DIP GALVANIZED
HL	HIGH LIMIT
HP	HORSEPOWER
HR	HOUR
HT	HEIGHT
HZ	HERTZ
ID	DIAMETER, INSIDE
IN	INCH
INSUL	INSULATION

ABBREVIATIONS - (CONT)

SYMBOL	DESCRIPTION
KWH	KILOWATT PER HOUR
LAT	LEAVING AIR TEMPERATURE
LF	LINEAR FEET
LL	LOW LIMIT
LR	LONG RADIUS
LVG	LEAVING
LWT	LEAVING WATER TEMPERATURE
MAX	MAXIMUM
MBH	BTU PER HOUR, THOUSANDS
MCA	MINIMUM CIRCUIT AMPACITY
MCC	MOTOR CONTROL CENTER
MECH	MECHANICAL
MEZZ	MEZZANINE
MFG	MANUFACTURER
MHP	MOTOR HORSEPOWER
MIN	MINIMUM
MISC	MISCELLANEOUS
MOP	MAXIMUM OVERCURRENT PROTECTION
MTD	MOUNTED
MVD	MOTORIZED VOLUME DAMPER
NA	NOT APPLICABLE
NC	NOISE CRITERIA
NC	NORMALLY CLOSED
NEC	NATIONAL ELECTRIC CODE
NIC	NOT IN CONTRACT
NO	NUMBER
NO	NORMALLY OPEN
NTS	NOT TO SCALE
OA	OUTSIDE AIR
O/A	OUTSIDE AIR
OAG	OUTSIDE AIR INTAKE GRILLE
OAL	OUTSIDE AIR LOUVER
ODP	OPEN DRIP PROOF
PH	PHASE
PSI	POUNDS PER SQUARE INCH
PVC	POLYVINYL CHLORIDE
PSID	POUNDS PER SQUARE INCH DIFFERENTIAL
RA	RETURN AIR
REF	REFERENCE
RET	RETURN
RH	RELATIVE HUMIDITY
RHC	REHEAT COIL
RM	ROOM
RPM	REVOLUTIONS PER MINUTE
SA	SUPPLY AIR
SP	STATIC PRESSURE
SPEC	SPECIFICATION
SQ FT	SQUARE FEET
SR	SHORT RADIUS
SS	STAINLESS STEEL
STD	STANDARD
SWP	SAFE WORKING PRESSURE
SD	SMOKE DETECTOR
T	THERMOSTAT
TA	THROW-AWAY
TEFC	TOTALLY ENCLOSED FAN COOLED
TEMP	TEMPERATURE
TYP	TYPICAL
UC	UNDERCUT
UG	UNDERGROUND
UH	UNIT HEATER
UNO	UNLESS NOTED OTHERWISE
V	VENT
VAV	VARIABLE AIR VOLUME
VD	MANUAL VOLUME DAMPER
VEL	VELOCITY
VFD	VARIABLE FREQUENCY DRIVE
VOL	VOLUME
VTR	VENT THROUGH ROOF
W/O	WITHOUT
W/	WITH
WB	WET BULB TEMPERATURE
WCO	WALL CLEANOUT
WT	WEIGHT

H.V.A.C. LEGEND

SYMBOL	DESCRIPTION
12/10	DUCT SIZE, WIDTH/DEPTH
	FLEXIBLE DUCT
	FLEXIBLE DUCT WITH SPIN-IN FITTING AND MANUAL VOLUME DAMPER
X/X	RIGID DUCTWORK (WIDTH/DEPTH)
	ELBOW WITH TURNING VANES
	MANUAL SPLITTER DAMPER
	SUPPLY DUCT (TURNED UP)
	SUPPLY DUCT (TURNED DOWN)
	RETURN DUCT (TURNED UP)
	RETURN DUCT (TURNED DOWN)
	MANUAL VOLUME DAMPER
MVD	OPPOSED BLADE MOTORIZED CONTROL DAMPER
R / D	INCLINED RISE (R) OR DROP (D), ARROW IN DIRECTION OF FLOW
	TRANSITION
	TURNING VANES
	FLEXIBLE CONNECTION
FD	FIRE DAMPER
	SUPPLY DIFFUSER, SEE GRILLE REGISTER AND DIFFUSER SCHEDULE FOR DESCRIPTION THROW DIRECTION INDICATED ON PLANS
	RETURN REGISTER, SEE GRILLE REGISTER AND DIFFUSER SCHEDULE FOR DESCRIPTION
	EXHAUST DIFFUSER, SEE GRILLE REGISTER AND DIFFUSER SCHEDULE FOR DESCRIPTION
MVD	OPPOSED BLADE MOTORIZED VOLUME DAMPER
T	THERMOSTAT/TEMP SENSOR
CD	CONDENSATE DRAIN LINE
RS/RL	REFRIGERANT LIQUID AND SUCTION PIPING
	PIPE TURNING UP
	PIPE TURNING DOWN
	TOP CONNECTION
	BOTTOM CONNECTION

AIR DISTRIBUTION DEVICE:
NECK SIZE → 20X8-SW → TYPE
AIR QUANTITY → 350CFM

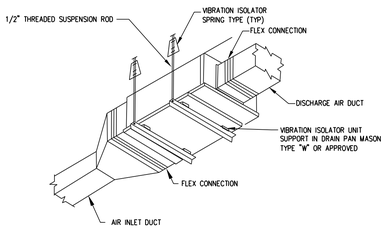

1 M001 SUSPENDED CABINET TYPE IN-LINE EXHAUST FAN DETAIL
NTS

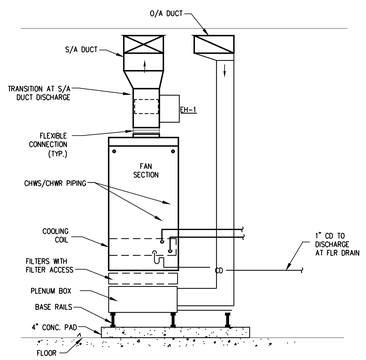

2 M001 AHU-1 ELEVATION SCHEMATIC
NTS

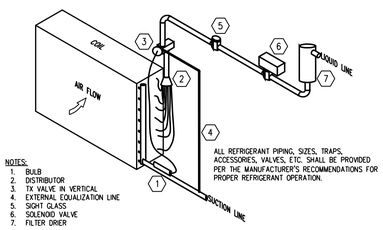

NOTES:
1. BULB
2. DISTRIBUTOR
3. TX VALVE IN VERTICAL
4. EXTERNAL EQUALIZATION LINE
5. SIGHT GLASS
6. SOLENOID VALVE
7. FILTER DRIER

ALL REFRIGERANT PIPING, SIZES, TRAPS, ACCESSORES, VALVES, ETC. SHALL BE PROVIDED PER THE MANUFACTURER'S RECOMMENDATIONS FOR PROPER REFRIGERANT OPERATION.

3 M001 DX COIL PIPING DETAIL
NTS

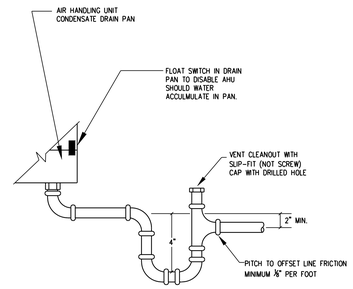

4 M001 CONDENSATE TRAP DETAIL
NTS

HARVARD JOLLY ARCHITECTURE
1639 Hendry Street, Fort Myers, FL 33901 | 727-896-4611 | www.HarvardJolly.com | AAC000119

ESTERO ON THE RIVER
RESTROOM FACILITY
ESTERO, FLORIDA
CONSTRUCTION DOCUMENTS

Comm. No:	22031.01
Date:	12/09/22
Drawn:	VH

Revisions

No.	Date	Note

TO THE BEST OF MY KNOWLEDGE, THE PLANS AND SPECIFICATIONS COMPLY WITH THE MINIMUM BUILDING CODES.

JASON L. SMITH, P.E.
OCCI ASSOCIATES, INC.
MAINLAND, FL 32751
FL REG. NO.: PE37743

OCCI ASSOCIATES, INC
Orlando. Fort Pierce. Fort Myers. West Palm Beach. Tampa. Washington DC. Miami. Dallas. San Francisco. Norfolk.
9728 Commerce Center Court, Ft. Myers, FL 33908 | p. 239-454-5117
www.ociassociates.com

GENERAL NOTES, SPECS, DETAILS - HVAC

M-001

H.V.A.C. KEYNOTES :

1. INSTALL VERTICAL DISCHARGE AHU-1 ON BASE RAILS WITH MIXING BOX AT THE BOTTOM. ENSURE CLEARANCES FOR FILTER REMOVAL AT THE INLET OF AHU AND DUCT HEATER AT DISCHARGE.
2. CONDENSING UNIT SHALL BE MOUNTED ON 4" CONCRETE PAD ON GRADE. EXACT LOCATION TO BE FINALIZED IN THE FIELD WITH ARCHITECT/OWNER.
3. IN-LINE EXHAUST FAN SUSPENDED FROM THE ROOF STRUCTURE. PROVIDE VIBRATION ISOLATORS OF THE NEOPRENE TYPE.
4. EXHAUST DUCT UP THROUGH THE ROOF. PROVIDE TERMINATION AT GOOSENECK OR PREFABRICATED VENT WITH RAIN CAP, WITH INTEGRAL BACKDRAFT DAMPER AND BIRDSCREEN.
5. PROVIDE DIGITAL PROGRAMMABLE 24/7 TEMPERATURE CONTROLLER TO OPERATE THE HVAC SYSTEM DURING PRE-DETERMINED OCCUPIED HOURS.
6. RS/RL PIPING TO RUN HIGH TIGHT TO THE ROOF STRUCTURE AND DOWN ALONG EXTERIOR WALL, AND OUT TO THE CONDENSING UNIT.
7. 1" A/C CONDENSATE DRAIN PIPING PITCHED DOWNWARDS FROM THE AHU AND DOWN ALONG WALL ROUTED TO CUSTODIAL ROOM TO DISCHARGE IN MOP SINK.
8. O/A INTAKE GRILLE IN EXTERIOR SOFFIT. PROVIDE A LOW-PROFILE PLENUM BOX AT THE GRILLE OR FABRICATE A CUSTOM BOX TO FIT IN THE TIGHT SPACE.
9. O/A DUCT SHALL BE ROUTED BETWEEN TRUSSES ABOVE THE TIE-BEAM AT THE EXTERIOR WALL.
10. PROVIDE MOTORIZED DAMPER IN O/A DUCT, INTERLOCKED WITH AHU, TO OPEN ONLY IN OCCUPIED MODE WHEN AHU TURNS ON.

SPLIT SYSTEM DX AIR HANDLING UNIT SCHEDULE

MARK	SERVES	INDOOR UNIT												COOLING CAPACITY		BASIS OF DESIGN		NOTES
		FAN						ELECTRIC HEATER		ELECTRIC DATA								
		CFM	O/A	E.S.P. (IN.)	HP [WATT]	V/ø	FLA	KW	# OF STEPS	FLA	MCA	MOCP	WEIGHT (LBS.)	TC (MBH)	SC (MBH)	MFG.	MODEL	
AHU-1	RESTROOMS/ CUSTODIAN	580	580	1.0	1/2	208/1	5.0	4.0	1	19.23	30.29	35	266	49.0	26.7	ENVIROTEC	VD008	(1) TO (5)

NOTES:
(1) REFRIGERANT TYPE R-410A.
(2) COOLING PERFORMANCE BASED ON SUMMER DESIGN CONDITIONS: OUTDOOR AMBIENT 94°F DB/80°F WB; INDOOR 75°F DB.
(3) PROVIDE DIGITAL PROGRAMMABLE THERMOSTAT FOR WALL MOUNTING.
(4) REFRIGERANT PIPE SIZING PROVIDED BY MANUFACTURER.
(5) COIL CASING AND DRAIN PAN SHALL BE STAINLESS STEEL.

OUTDOOR CONDENSING UNIT SCHEDULE

MARK	SERVES	COOLING CAPACITY		CONDENSER FAN			COMPRESSOR			MCA	MOCP	WEIGHT (LB)	EER [SEER]	BASIS OF DESIGN		NOTES
		MBH	AMBIENT DESIGN (°F DB)	QTY.	V/ø	FLA	QTY.	V/ø	RLA					MFG.	MODEL	
CU-1	AHU-1	49	95	1	208/1	1.15	1	208/1	27	33.2	35	216	10.5 [20]	DAIKIN	5MXS48FVJU	(1)(2)(3)

NOTES
(1) OTHER ACCEPTABLE MFRS: MITSUBISHI/ TRANE.
(2) MANUFACTURER SHALL PROVIDE SHOP DRAWINGS INCLUDING ALL REFRIGERANT PIPING DESIGN INCLUDING SIZING, LAYOUT, CONTROLLERS, ETC.
(3) PROVIDE SEACOAST COATING FOR THE CONDENSER COIL.

FAN SCHEDULE

MARK	SERVICE	TYPE	FAN				MOTOR		WEIGHT LBS	EQUAL TO		NOTES
			CFM	E.S.P. (IN.)	DRIVE	RPM (MAX)	HP [WATTS]	V/ø		MFG.	MODEL	
EF-1	RESTROOMS	IN-LINE CABINET	475	0.38	DIRECT	1550	1/6	120/1	49	GREENHECK	SQ-95-D	(1)(2)

NOTES:
(1) PROVIDE WEATHER-PROOF DISCONNECT SWITCH MOUNTED AT THE UNIT.
(2) EXHAUST FANS SHALL OPERATE ON OCCUPIED/UNOCCUPIED SCHEDULE VIA 24/7 YEARLY PROGRAMMABLE DIGITAL TIME-CLOCK. THE CLOCK SHALL BE PROGRAMMED PER THE OWNER'S SCHEDULE.

DIFFUSER/GRILLE/LOUVER SCHEDULE

MARK / LEGEND	TYPE	MFR.	MODEL	FINISH	NOTES
NECK SIZE — 8X8-SR; AIR QUANTITY — 200CFM	CEILING/SIDEWALL MOUNTED SUPPLY AIR REGISTER	KRUEGER	5880	WHITE	(1)(2)
		PRICE	6200AL		
NECK SIZE — 8X8-EG; AIR QUANTITY — 200CFM	CEILING OR SIDEWALL EXHAUST AIR GRILLE	KRUEGER	AFS580-35	WHITE	(1)(2)
		PRICE	630D		
NECK SIZE — 8X8-OAG; AIR QUANTITY — 200CFM	OUTDOOR AIR CEILING GRILLE	KRUEGER	S580-35	WHITE	(1)(2)
		PRICE	630D		

NOTES:
(1) PROVIDE WITH OPPOSED BLADE VOLUME DAMPER.
(2) ALL AIR DEVICES SHALL BE ALUMINUM. ALUMINIZED STEEL IS NOT ACCEPTABLE.

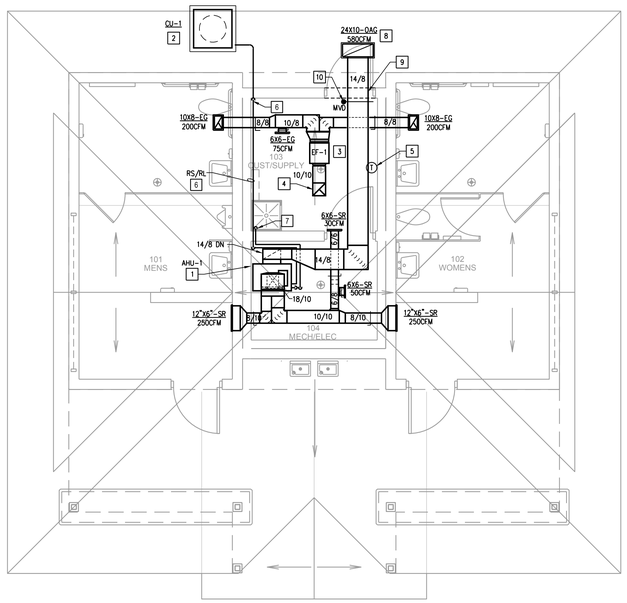

1 FLOOR PLAN - HVAC
SCALE: 1/4" = 1'-0"

N

HARVARD ● JOLLY ARCHITECTURE
1639 Hendry Street, Fort Myers, FL 33901 | 727-896-4611 | www.HarvardJolly.com | AAC000119

ESTERO ON THE RIVER
RESTROOM FACILITY
ESTERO, FLORIDA
CONSTRUCTION DOCUMENTS

Comm. No:	22031.01
Date:	12/09/22
Drawn:	VH

Revisions

No.	Date	Note

TO THE BEST OF MY KNOWLEDGE, THE PLANS AND SPECIFICATIONS COMPLY WITH THE MINIMUM BUILDING CODES.

JASON L. SMITH, P.E.
600 S. ORLANDO AVE.
MAITLAND, FL 32751
FL REG. NO.: PE57743

FLOOR PLAN - HVAC

M-101

OCI ASSOCIATES, INC
Orlando. Fort Pierce. Fort Myers. West Palm Beach. Tampa. Washington DC. Miami. Dallas. San Francisco. Norfolk.
9728 Commerce Center Court, Ft. Myers, FL 33908 | p. 239-454-5117
www.ociassociates.com

ELECTRICAL SYMBOLS LEGEND

NOTE: THESE ARE STANDARD SYMBOLS AND ALL MAY NOT APPEAR ON THE PROJECT DRAWINGS.

LIGHTING

NOTE:
UPPER CASE LETTER INDICATES FIXTURE TYPE, REFER TO LIGHTING FIXTURE SCHEDULE AND DRAWINGS.
LOWER CASE LETTER INDICATES SWITCH CIRCUIT.

- 2' x 2' RECESSED MOUNTED LED LIGHT FIXTURE.
- LED RECESSED DOWNLIGHT FIXTURE.
- INDUSTRIAL STRIP LED LUMINAIRE
- LED COVE LIGHT – MOUNTED ON A SURFACE ALUMINUM CHANNEL
- EMERGENCY BATTERY LIGHTING UNIT, HEADS AS INDICATED
- CEILING MOUNTED EXIT LIGHTS, SINGLE AND DOUBLE FACED, ARROWS AS SHOWN ON LIGHTING FLOOR PLANS
- LINEAR LIGHT LUMINAIRE – WALL MOUNTED
- LINEAR LIGHT LUMINAIRE – CEILING MOUNTED

SWITCHES

S SINGLE POLE SWITCH (UNLESS NOTED BY SUBSCRIPT)
* (D) DIMMER SWITCH
(T) SINGLE PHASE MOTOR STARTING SWITCH
(OS) OCCUPANCY SENSOR – DUAL TECHNOLOGY, AUTO OFF, AUTO ON
(VS) VACANCY SENSOR – DUAL TECHNOLOGY, AUTO OFF, MANUAL ON
(42") MOUNTING HEIGHT AFF, TO CENTER OF BACKBOX
(OR) LIGHTING CONTROL RELAY PANEL OVERRIDE.

- (OS) CEILING MOUNTED OCCUPANCY SENSOR, DUAL TECHNOLOGY, LOW VOLTAGE WITH POWER PACKS. AUTO OFF AFTER 30 MINUTES, AUTO ON.
- (VS) CEILING MOUNTED VACANCY SENSOR, DUAL TECHNOLOGY, LOW VOLTAGE WITH POWER PACKS. AUTO OFF AFTER 30 MINUTES, MANUAL ON.
- (PC) PHOTOCELL

CONDUIT AND WIRES

- CONDUIT CONCEALED IN WALLS OR ABOVE CEILINGS
- CONDUIT CONCEALED UNDERGROUND OR IN SLAB
- CONDUIT EXPOSED ON WALLS OR CEILINGS
- EXISTING CONDUIT
- CONDUIT HOMERUN – CONDUCTORS ARE #12 AWG CU UNLESS OTHERWISE INDICATED. (SEE SPECIFICATIONS FOR DERATING OF CONDUCTORS BASED ON CIRCUIT LENGTH AND CONDUCTORS IN A CONDUIT)

RECEPTACLES

- * DUPLEX RECEPTACLE
  * (G) DUPLEX GFCI RECEPTACLE
- * DUPLEX RECEPTACLE MOUNTED ABOVE COUNTER
  * (G) DUPLEX GFCI RECEPTACLE
- * QUADRAPLEX RECEPTACLE IN TWO GANG BOX COVER.
  * (SS) SURGE SUPPRESSOR RECEPTACLE LEVITON #5380-B, 20A, 125A, NEMA 5-20R, 2P, 3W.
- 5-30R SPECIAL OUTLET, SUBSCRIPT INDICATES NEMA CONFIGURATION NUMBER
- ENCLOSED CIRCUIT BREAKER.
- EF MOTOR CONNECTION, MARK NUMBER WILL IDENTIFY EQUIPMENT, EF, AHU, CU, ETC. SEE MOTOR CONNECTION SCHEDULE.
- NON FUSIBLE HEAVY DUTY SAFETY SWITCH, SIZE AND NUMBER OF POLES ARE INDICATED.

RECEPTACLE COVERPLATE LABEL

THIS CONTRACTOR SHALL PROVIDE CIRCUIT SERVING EACH RECEPTACLE ON THE COVERPLATE IN THIS FACILITY. PROVIDE KROYED LETTERING ON A CLEAR LABEL WITH ADHESIVE BACKING.

POWER CONNECTIONS

- (J) CEILING MOUNTED JUNCTION BOX ACCORDING TO N.E.C. REQUIREMENTS UNLESS NOTED.
- (J) WALL MOUNTED JUNCTION BOX ACCORDING TO N.E.C. REQUIREMENTS UNLESS NOTED.

SECURITY SYSTEM

PROVIDE FLUSH MOUNTED 48" A.F.F. TO CENTERLINE OF BACKBOX FOR KEYPAD, AND ABOVE DOOR OR WHERE REQUIRED FOR MAGNETIC DOOR SWITCH. THIS CONTRACTOR SHALL PROVIDE A 4" SQUARE BACKBOX WITH SINGLE GANG MUDRING AND COVERPLATE. PROVIDE 3/4"C. WITH PULL STRING UP TO ACCESSIBLE CEILING SPACE AND TERMINATE. PROVIDE BUSHINGS ON BOTH ENDS OF CONDUIT.

- (KP) KEYPAD
- (MS) SUPERVISORY MAGNETIC DOOR SWITCH

ABBREVIATIONS

A	– AMPERES
AC	– ABOVE COUNTER
AFF	– ABOVE FINISHED FLOOR
AFG	– ABOVE FINISHED GRADE
AL	– ALUMINUM
ANN	– ANNUNCIATOR
ARCH	– ARCHITECT
ATS	– AUTOMATIC TRANSFER SWITCH
AWG	– AMERICAN WIRE GAUGE
BFG	– BELOW FINISHED GRADE
C	– CONDUIT
CAT	– CATALOG
CKT	– CIRCUIT
CU	– COPPER
C/B	– CIRCUIT BREAKER
C/T	– CURRENT TRANSFORMERS
△	– DELTA
DWG	– DRAWING
EWC	– ELECTRIC WATER COOLER
FT	– FEET
G	– GROUND
GEN	– GENERATOR
GFI	– GROUND FAULT INTERRUPT
IG	– ISOLATED GROUND
KVA	– KILOVOLT – AMPERES
KW	– KILOWATTS
MCB	– MAIN CIRCUIT BREAKER
MCC	– MOTOR CONTROL CENTER
MCM	– THOUSAND CIRCULAR MILS
MISC	– MISCELLANEOUS
MLO	– MAIN LUGS ONLY
NEC	– NATIONAL ELECTRICAL CODE
NC	– NORMALLY CLOSED
NL	– NIGHT LIGHT CIRCUIT
NO	– NORMALLY OPEN
NTS	– NOT TO SCALE
NIC	– NOT IN CONTRACT
ø	– PHASE
POS	– POINT OF SALE
PVC	– POLYVINYL CHLORIDE
P/T	– POTENCIAL TRANSFORMER
R	– RECESSED
SCR	– SHORT CIRCUIT RATING
SURF	– SURFACE
TEL	– TELEPHONE
UG	– UNDERGROUND
UNIV	– UNIVERSAL
UNO	– UNLESS NOTED OTHERWISE
V	– VOLTS
W	– WATTS
WP	– WEATHERPROOF
WPG	– WEATHERPROOF WITH GROUND
	– FAULT INTERRUPT
XFMR	– TRANSFORMER
XP	– EXPLOSION PROOF
Y	– WYE

GENERAL ELECTRICAL NOTES

EQUIPMENT SHALL BE OF MATERIALS SUITABLE FOR AND NEMA RATED FOR THE ENVIRONMENT IN WHICH THEY ARE TO BE INSTALLED.

1. WORKING CLEARANCES FOR ELECTRICAL EQUIPMENT SHALL BE IN COMPLIANCE WITH NATIONAL ELECTRICAL CODE ARTICLE 110.
2. A. THE EXCLUSIVELY DEDICATED SPACE EXTENDING FROM FLOOR TO STRUCTURAL CEILING WITH A WIDTH AND DEPTH OF THE PANELBOARD, SWITCHBOARD, MOTOR STARTER, DISCONNECT SWITCH OR TRANSFORMER MUST BE CLEAR OF ALL PIPING, DUCTS, EQUIPMENT FOREIGN TO THE ELECTRICAL EQUIPMENT OR ARCHITECTURAL APPURTENANCES IN ACCORDANCE WITH NATIONAL ELECTRICAL CODE ARTICLE 384.
   B. COORDINATE ALL FLUSH MOUNTED PANELS WITH HVAC DUCTS AND PIPING TO MAINTAIN EXCLUSIVELY DEDICATED SPACE PER NOTE 2.A ABOVE.

WHEN ELECTRICAL BOXES ARE LOCATED IN VERTICAL FIRE RESISTIVE ASSEMBLIES (CLASSIFIED AS FIRE/SMOKE AND SMOKE PARTITIONS), ALL OF THE FOLLOWING CONDITIONS SHALL BE MET:

3. A. ALL ELECTRICAL BOXES SHALL BE METALLIC.
   B. BOX OPENINGS SHALL OCCUR ONLY ON ONE SIDE OF FRAMING SPACE.
   C. BOX OPENINGS SHALL NOT EXCEED 16 SQUARE INCHES.
   D. ALL CLEARANCES BETWEEN OUTLET BOX AND GYPSUM BOARD SHALL BE COMPLETELY SEALED WITH JOINT COMPOUND OR OTHER APPROVED MATERIAL.
   E. PROVIDE A WALL AROUND OUTLETS LARGER THAN 16 INCHES SO THAT THE INTEGRITY OF THE FIRE RATING OF THE WALL IS MAINTAINED.
   F. THE TOTAL AGGREGATE SURFACE AREA OF THE BOXES SHALL NOT EXCEED 100 SQUARE INCHES PER 100 SQUARE FEET.
   G. OUTLET BOXES LOCATED ON OPPOSITE SIDES OF FIRE RESISTIVE ASSEMBLIES SHALL BE SEPARATED BY A MINIMUM HORIZONTAL DISTANCE OF 24 INCHES.
   H. OUTLET BOXES SHALL BE SECURELY FASTENED TO WALL FRAME MEMBERS.
   I. THE OPENING IN THE GYPSUM BOARD FACING SHALL BE CUT NOT TO EXCEED 1/8 INCH BETWEEN THE EDGES OF THE OUTLET BOX AND THE EDGES OF THE OPENING.
4. LOCATIONS OF EQUIPMENT SHOWN ON THE DRAWINGS WHICH REQUIRE ELECTRICAL CONNECTIONS AND ARE NOT PROVIDED UNDER DIVISION 26 ARE SHOWN APPROXIMATE. COORDINATE EXACT LOCATIONS OF EQUIPMENT AND ELECTRICAL CONNECTIONS WITH APPROPRIATE TRADE PRIOR TO ROUGHING IN AND ROUTING CONDUIT.
5. COORDINATE EXACT LOCATIONS OF LIGHT FIXTURES IN LAY-IN AND DRYWALL CEILINGS WITH ARCHITECTURAL REFLECTED CEILING PLANS.
6. PROVIDE FINAL CONNECTIONS TO OWNER-PROVIDED EQUIPMENT INDICATED ON THE PLAN DRAWINGS REQUIRING HARD-WIRE CONNECTIONS.
7. VERIFY AND COORDINATE POWER AND DATA OUTLETS, AS WELL AS LIGHT FIXTURES WITH MECHANICAL AND OWNER-PROVIDED EQUIPMENT.
8. LIGHT SWITCHES SHALL BE MOUNTED 46" A.F.F. TO CENTERLINE OF DEVICE UNLESS OTHERWISE NOTED.
9. RECEPTACLES SHALL BE MOUNTED 18" A.F.F. TO CENTERLINE OF DEVICE UNLESS OTHERWISE NOTED.
10. CONDUIT, RACEWAYS, BOXES, ETC. SHALL BE SPOT PAINTED PRIOR TO LABELING. CONDUITS SHALL BE IDENTIFIED WITH IN 6 INCHES OF THE BOX OR ENCLOSURE. THE ENTIRE BOX AND COVER PLATE SHALL BE PAINTED.
11. APPLY BANDS 10 FEET ON CENTER ALONG THE RACEWAY SYSTEMS.
12. ALL RECEPTACLES AND JUNCTION BOXES TO BE MARKED WITH CIRCUIT AND PANEL LABEL MARKERS.
13. RECEPTACLES AND OUTLETS NEAR FLOOR LEVEL SHALL BE 16 INCHES OFF THE FINISHED FLOOR ON THE BOTTOM AND 20 INCHES TO THE TOP.
14. ALL IN WALL WIRING TO BE IN EMT RACEWAYS. ALL CONDUITS USED TO BE MINIMUM 1 TRADE SIZE LARGER THAN REQUIRED BY NEC FOR WIRE FILL.
15. ALL PRODUCTS USED ON THIS PROJECT MUST BE IN COMPLIANCE WITH THE MOST CURRENT APPLICABLE EDITION OF THE FLORIDA BUILDING CODE.

LUMINAIRE SCHEDULE

TYPE	DESCRIPTION	LAMPS NO.	LAMPS TYPE	LAMPS WATTS	LAMPS TEMP	VOLTAGE	MOUNTING	NOTES
A	WALL MOUNTED VANITY LIGHT FIXTURE. 3 LAMP, MAX 100W PER LAMP, E26/27 SOCKET. KOHLER CAT# DEVONSHIRE-K-10572-BNL	–	LED	300W	3500K	120	SURFACE	WALL MOUNT HORIZONTALLY ABOVE SINK MIRROR. PROVIDE LED LAMPS.
C	4" LED RECESSED DOWNLIGHT. STEEL HOUSING CONSTRUCTION, SEMI-SPECULAR FINISH. LITHONIA CAT# LDN4-40/15-L04-AR-LSS-120-GZ10	–	LED	18W	4000K	120	RECESSED	
CE	SAME AS FIXTURE "C" EXCEPT FOR PROVIDED WITH EMERGENCY BATTERY PACK WITH INTEGRAL TEST SWITCH. LITHONIA CAT# LDN4-40/15-L04-AR-LSS-120-GZ10-EL	–	LED	18W	4000K	120	RECESSED	PROVIDE WITH FACTORY INSTALLED BATTERY PACK.
CS	SAME AS FIXTURE "C" EXCEPT FOR PROVIDED WITH SLOPE CEILING ADAPTER. LITHONIA CAT# LDN4-40/15-L04-AR-LSS-120-GZ10-SCA4 X ANGLE	–	LED	18W	4000K	120	RECESSED	COORDINATE ANGLE WITH CONSTRUCTION MANAGER PRIOR TO ORDERING.
D	4' VAPORPROOF LED LINEAR FIXTURE. POLYCARBONATE HOUSING. FROSTED POLYCARBONATE LENS. IP65 RATED. LITHONIA #CSVT-L48-5000LM-MVOLT-40K-80CRI	–	LED	42	4000K	UNV	SURFACE	
F	52" CEILING FAN. OUTDOOR RATED. TERON CAT# 8300K-339629MWH	–	–	49	–	120	SURFACE	
EM	LED EMERGENCY LIGHT. NICAD BATTERY. IMPACT RESISTANT THERMOPLASTIC CONSTRUCTION. PROVIDE WITH WIRE GUARD. LITHONIA #EU2L / ELAWG1	–	LED	–	–	UNV	SURFACE	WALL MOUNT AT 7' 6" AFF.
X	VANDAL RESISTANT LED SINGLE FACE EXIT SIGN WITH GREEN LETTERS. CLEAR POLYCARBONATE COVER. NICAD BATTERY. LITHONIA CAT# LV-S-W-1-G-120/277-EL N	–	LED	–	–	UNV	SURFACE	PROVIDE LIGHT FIXTURE WITH INTEGRAL EMERGENCY BATTERY PACK FOR 90 MINUTES OF LAMP OPERATION. WALL MOUNT AS INDICATED ON PLANS.

GENERAL LIGHTING FIXTURE NOTES:

1. COORDINATE TYPE OF CEILING FOR EACH FIXTURE WITH ARCHITECTURAL REFLECTED CEILING PLANS AND PROVIDE FIXTURE TRIM AS REQUIRED.
2. IF THERE IS A DISCREPANCY BETWEEN A FIXTURE DESCRIPTION AND GENERAL NOTES, AND THE CATALOG NUMBER LISTED, THE FIXTURE DESCRIPTION AND GENERAL NOTES SHALL DICTATE.
3. ALL FIXTURES SHALL BE PAINTED AFTER FABRICATION.
4. MANUFACTURERS OTHER THAN THOSE LISTED SHALL SUBMIT AND RECEIVE PRIOR APPROVAL 10 DAYS PRIOR TO BID DATE.
5. PROVIDE DOCUMENTATION OF IESNA PHOTOMETRIC LM-79 TESTING PROCEDURES, LED LIFETIME LM-80 TESTING PROCEDURES, AND WARRANTY WITH SUBMITTAL.
6. ALL LED LUMINAIRES SHALL COMPLY WITH LM79 AND LM80 STANDARDS.

APPLICABLE CODES :

1. 2020 FLORIDA BUILDING CODE, 7TH EDITION
2. NFPA 70 – 2017 NATIONAL ELECTRICAL CODE
3. NFPA 72 – 2016 NATIONAL FIRE ALARM AND SIGNALING CODE
4. NFPA 101 – 2018 LIFE SAFETY CODE

LOW VOLTAGE CABLING NOTE :

ALL LOW VOLTAGE CABLING, DEVICES, ETC. SHALL BE PROVIDED AND INSTALLED BY THE OWNER AND WILL BE PERMITTED SEPARATELY.

1 SYMBOL LEGEND, LUMINAIRE SCHEDULE, DRAWING INDEX AND NOTES - ELECTRICAL
NTS

OCI ASSOCIATES, INC
Orlando. Fort Pierce. Fort Myers. West Palm Beach. Tampa. Washington DC. Miami. Dallas. San Francisco. Norfolk.
9728 Commerce Center Court, Ft. Myers, FL 33908 | p. 239-454-5117
www.ociassociates.com

HARVARD ● JOLLY
ARCHITECTURE
1639 Hendry Street, Fort Myers, FL 33901 | 727-896-4611 | www.HarvardJolly.com | AAC000119

ESTERO ON THE RIVER
RESTROOM FACILITY
ESTERO, FLORIDA
CONSTRUCTION DOCUMENTS

Comm. No:	22031.01
Date:	12/09/22
Drawn:	XXX

Revisions

No.	Date	Note

TO THE BEST OF MY KNOWLEDGE, THE PLANS AND SPECIFICATIONS COMPLY WITH THE MINIMUM BUILDING CODES.

KYRIAKOS G. LIATSOS, P.E.
600 S. ORLANDO AVE.
MAITLAND, FL 32751
FL REG. NO.: PE66402

GENERAL NOTES - ELECTRICAL

E-001

PRINT DATE:12/8/2022 4:50 PM SAVE DATE:12/8/2022 10:40 AM FILE LOCATION:\\LS1\PROJECT DATA\22 JOBS\22226 - ESTERO ON THE RIVER RESTROOM FACILITY\DWGS\22226E-001.DWG

POWER SHEET KEYNOTES [X]:

1. 30A., 2P, 240V, HD, NEMA 3R, NON-FUSED DISCONNECT SWITCH FOR CONDENSING UNIT. THIS CONTRACTOR SHALL PROVIDE FINAL CONNECTIONS UTILIZING FLEXIBLE STEEL CONDUIT.
2. 30A., 2P, 240V, HD, NEMA 1, NON-FUSED DISCONNECT SWITCH FOR AIR HANDLER. THIS CONTRACTOR SHALL PROVIDE FINAL CONNECTIONS UTILIZING FLEXIBLE STEEL CONDUIT.
3. 30A., 2P, 240V, HD, NEMA 3R, NON-FUSED DISCONNECT SWITCH FOR TANK WATER HEATER. THIS CONTRACTOR SHALL PROVIDE FINAL CONNECTIONS UTILIZING FLEXIBLE STEEL CONDUIT.
4. GFCI RECEPTACLE FOR RECIRCULATING PUMP. MOUNT ABOVE CLOSE TO PUMP LOCATION.

POWER GENERAL NOTES :

A. LOCATIONS OF ALL DEVICES ON DRAWINGS ARE APPROXIMATE ONLY. VERIFY EXACTLY LOCATION WITH OWNERS REPRESENTATIVES, ARCHITECT AND/OR ENGINEER PRIOR TO ROUGH-IN.

B. ALL RACEWAYS AND CABLE SHALL BE CONCEALED UNLESS NOTED OR APPROVED IN WRITING BY OWNER AND/OR ENGINEER.

C. MOUNT ALL DISCONNECT SWITCHES FOR MECHANICAL EQUIPMENT WITHIN 6FT. OF EQUIPMENT CONNECTION POINT. VERIFY LOCATION OF THE POINT OF CONNECTION WITH EQUIPMENT INSTALLER PRIOR TO ELECTRICAL ROUGH-IN. (DRAWINGS SHOW DIAGRAMMATIC LOCATION OF CONNECTION)

D. ALL CONTROL WIRING FOR MECHANICAL EQUIPMENT AND SYSTEMS SHALL BE PROVIDED BY THE MECHANICAL CONTRACTOR.

E. MINIMUM SIZE CONDUIT SHALL BE 3/4" UNLESS OTHERWISE NOTED.

LIGHTING SHEET KEYNOTES [X]:

1. EXIT SIGN – CEILING MOUNTED. THIS CONTRACTOR SHALL RUN A UNSWITCHED 120V LIGHT CIRCUIT TO NEW EXIT SIGN AHEAD OF ANY LOCAL SWITCHING.
2. HALF SHADED LIGHT FIXTURE SHALL BE PROVIDED WITH AN INTEGRAL EMERGENCY BATTERY PACK TO OPERATE LIGHT FIXTURE FOR 90 MINUTES DURING A POWER OUTAGE. CONTRACTOR SHALL RUN AN UNSWITCHED LEAD FOR THE EMERGENCY PACK. THIS SHALL NOT INTERRUPT SWITCHING OF LIGHT FIXTURE.
3. PHOTOCELL MOUNTED HIGH ON WALL FACING NORTH. COORDINATE EXACT LOCATION WITH CONSTRUCTION MANAGER PRIOR TO ROUGH-IN. PHOTOCELL SHALL BE INTERMATIC CAT # K4121C OR EQUIVALENT. CONNECT TO NORMALLY CLOSED CONTACTOR TO CONTROL EXTERIOR CEILING FANS. OPERATION SHALL BE FANS ON DURING THE DAY, AND LIGHTS ON DURING THE NIGHT. REFER TO DETAIL #6 ON SHEET E-501 FOR MORE INFORMATION.
4. LIGHTING FIXTURE CONTROLLED BY PHOTOCELL. SHALL BE ON DURING THE NIGHT.
5. OVERRIDE SWITCH FOR EXTERIOR FANS. THIS SWITCH SHALL BE CONNECTED BETWEEN CONTACTOR AND FANS. FANS SHALL BE ON DURING THE DAY.

LIGHTING GENERAL NOTES :

A. COORDINATE EXACT LOCATION OF EACH LIGHT FIXTURE WITH MECHANICAL PIPING, CONDUIT, HVAC GRILLES, ETC. FIELD ADJUST ANY LIGHT TO AVOID CONFLICT.

B. REFER TO ARCHITECTURAL REFLECTED CEILING PLANS FOR EXACT TYPE AND HEIGHT OF CEILING IN EACH ROOM. COORDINATE WITH ARCHITECT/ENGINEER PRIOR TO ROUGH-IN OF ANY FIXTURES. COORDINATE ALL CONTROL JOINT LOCATIONS WITH LIGHT FIXTURES PRIOR TO ANY ROUGH-IN OF FIXTURES.

C. EXIT LIGHTS SHALL BE MOUNTED WITH BOTTOM OF FIXTURE AT 6" ABOVE DOOR HEADER IN ALL AREAS THAT PERMIT THIS PLACEMENT. ALL OTHERS MAY BE CEILING MOUNTED.

D. COORDINATE LOCATION OF ALL LIGHT FIXTURES WITH ARCHITECTURAL INTERIOR ELEVATIONS PRIOR TO ROUGH-IN.

E. POWER PACK FOR OCCUPANCY SENSORS ARE NOT INDICATED ON PLANS. ELECTRICAL CONTRACTOR SHALL PROVIDE POWER PACKS PER OCCUPANCY SENSOR MANUFACTURER'S RECOMMENDATIONS.

F. LIGHTING FIXTURE CONTROL WITH OCCUPANCY SENSORS/PHOTOCELLS, ETC. SHOWN ON DRAWINGS ARE DIAGRAMMATIC. LIGHTING CONTROL SYSTEM PHOTOCELLS, OCCUPANCY SENSORS, WALL SWITCHES, POWER SUPPLIES (NOT SHOWN), ETC., SHALL BE COORDINATED WITH LIGHTING CONTROLS MANUFACTURER'S SHOP DRAWINGS. INDICATED QUANTITIES, TYPE, AND LOCATION OF DEVICES SHOWN ON LIGHTING CONTROLS MANUFACTURER'S SHOP DRAWINGS SHALL SUPERCEDE DEVICES INDICATED ON THIS DRAWING.

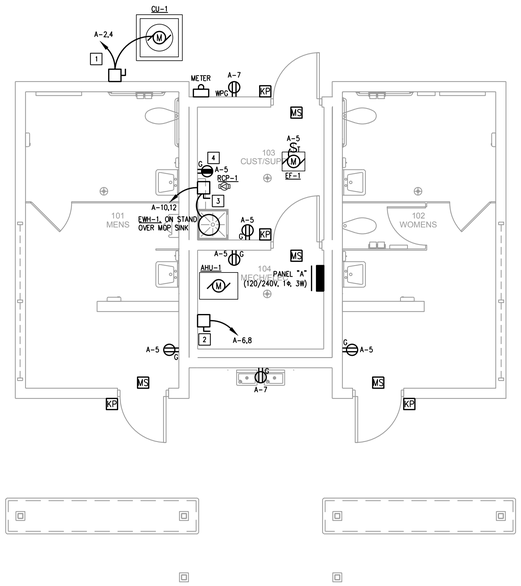

2 FLOOR PLAN - POWER
SCALE: 1/4" = 1'-0"

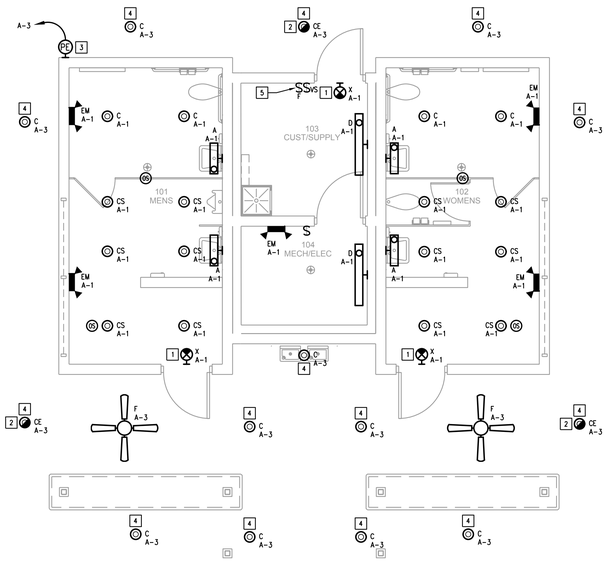

1 FLOOR PLAN - LIGHTING
SCALE: 1/4" = 1'-0"

N

HARVARD JOLLY ARCHITECTURE
1639 Hendry Street, Fort Myers, FL 33901 | 727-896-4611 | www.HarvardJolly.com | AAC000119

ESTERO ON THE RIVER RESTROOM FACILITY

ESTERO, FLORIDA

CONSTRUCTION DOCUMENTS

Comm. No:	22031.01
Date:	12/09/22
Drawn:	AJF

Revisions

No.	Date	Note

TO THE BEST OF MY KNOWLEDGE, THE PLANS AND SPECIFICATIONS COMPLY WITH THE MINIMUM BUILDING CODES.

KYRIAKOS G. LIATSOS, P.E.
600 S. ORLANDO AVE.
WINTER PARK, FL 32789
FL REG. NO.: PE58402

FLOOR PLAN - LTG AND POWER

E-101

OCI ASSOCIATES, INC
Orlando. Fort Pierce. Fort Myers. West Palm Beach. Tampa. Washington DC. Miami. Dallas. San Francisco. Norfolk.
9728 Commerce Center Court, Ft. Myers, FL 33908 | p. 239-454-5117
www.ociassociates.com

PRINT DATE:12/8/2022 4:50 PM SAVE DATE:12/8/2022 12:41 PM FILE LOCATION:\\LS\PROJECT DATA\22 JOBS\22226 - ESTERO ON THE RIVER RESTROOM FACILITY\DWGS\22226E-101.DWG

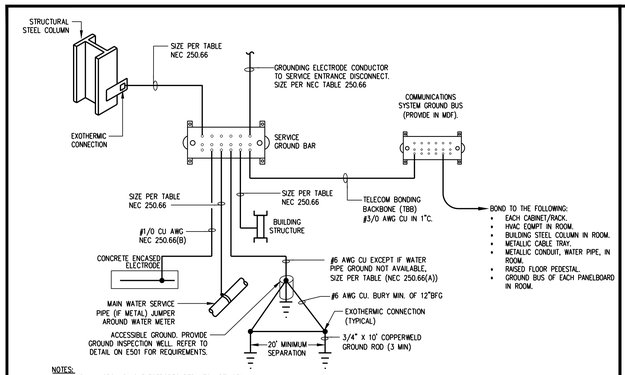

NOTES:
1. BOND ALL GROUNDING ELECTRODES PER NEC ART. 250.
2. ALL GROUNDING ELECTRODES SPECIFIED IN NEC 250.52(A)(1) THRU (A)(7) THAT ARE PRESENT ON SITE SHALL BE BONDED TOGETHER AND USED. IF NONE OF THESE GROUNDING ELECTRODES ARE PRESENT, ONE OR MORE OF THE "MADE" ELECTRODES SPECIFIED IN 250.52(A)(4) THRU (A)(8) SHALL BE INSTALLED AND USED.
3. PROVIDE GROUND ROD SYSTEM IN TRIAD FORMATION AS INDICATED.
4. DRIVE GROUND RODS FULL LENGTH INTO GROUND. TOP OF ROD TO 12" MIN BELOW FINISHED GRADE.

1 SERVICE GROUNDING DETAIL
N.T.S.

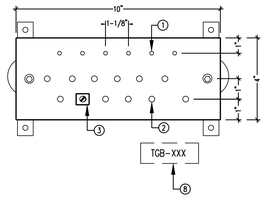

GENERAL

1. ALL HARDWARE (BOLTS, NUTS WASHERS, ETC.) SHALL SHALL BE SOLID COPPER OR BRONZE. COPPER PLATING SHALL NOT BE ACCEPTABLE.
2. BUSBAR SHALL BE 1/4" THICK(MINIMUM).
3. INCREASE LENGTH OF BUSBAR, FOR NUMBER OF OF CONNECTIONS, AS REQUIRED TO MAINTAIN CORRECT SPACING BETWEEN LUGS.

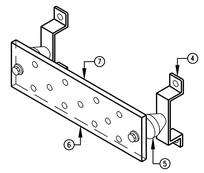

NOTE

1. #6/32 (TYPICAL)
2. #6/32 (TYPICAL)
3. PROVIDE COPPER CABLE CLAMPS FOR CABLE CONNECTIONS AS REQUIRED (BY ELECTRICAL CONTRACTOR).
4. STANDOFF BRACKET
5. INSULATOR
6. CADWELD544A018 OR EQUAL
7. COPPER BUSBAR
8. PROVIDE WHITE CORE BAKELITE NAMEPLATE FASTENED TO A WALL/SURFACE BELOW BUSBAR AT EACH FLOOR, WITH DESIGNATION ENGRAVED THEREON IN 1/2" HIGH LETTERS.

2 TYPICAL GROUND BUS BAR
NTS

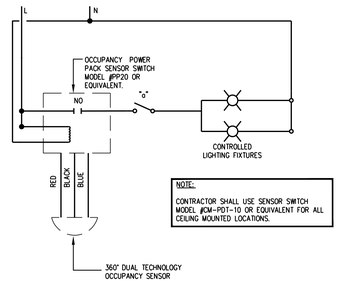

NOTE:
CONTRACTOR SHALL USE SENSOR SWITCH MODEL #CM-PDT-10 OR EQUIVALENT FOR ALL CEILING MOUNTED LOCATIONS.

3 TYPICAL "OS" RELAY DIAGRAM
N.T.S.

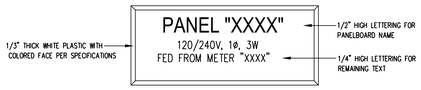

TYPICAL 120/240V PANELBOARD

4 PANELBOARD NAMEPLATE
N.T.S

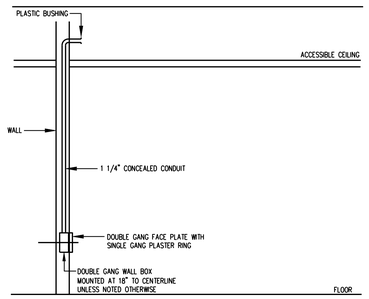

5 CONDUIT STUB UP MOUNTING DETAIL
N.T.S.

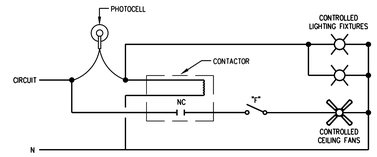

6 PHOTOCELL CONTACTOR DETAIL
N.T.S.

1 DETAILS - ELECTRICAL
NTS

HARVARD • JOLLY ARCHITECTURE
1639 Hendry Street, Fort Myers, FL 33901 | 727-896-4611 | www.HarvardJolly.com | AAC000119

ESTERO ON THE RIVER RESTROOM FACILITY
ESTERO, FLORIDA
CONSTRUCTION DOCUMENTS

Comm. No:	22031.01
Date:	12/09/22
Drawn:	AJF

Revisions

No.	Date	Note

TO THE BEST OF MY KNOWLEDGE, THE PLANS AND SPECIFICATIONS COMPLY WITH THE MINIMUM BUILDING CODES.

KYRIAKOS G. LIATSOS, P.E.
600 S. ORLANDO AVE.
MAITLAND, FL 32751
FL REG. NO.: PE66402

OCI ASSOCIATES, INC
Orlando. Fort Pierce. Fort Myers. West Palm Beach. Tampa. Washington DC. Miami. Dallas. San Francisco. Norfolk.
9728 Commerce Center Court, Ft. Myers, FL 33908 | p. 239-454-5117
www.ociassociates.com

DETAILS - ELECTRICAL

E-501

PRINT DATE:12/8/2022 4:50 PM SAVE DATE:12/7/2022 4:58 PM FILE LOCATION:\\LS1\PROJECT DATA\22 JOBS\22226 - ESTERO ON THE RIVER RESTROOM FACILITY\DWGS\22226E-501.DWG

ELECTRICAL SPECIFICATIONS

DIVISION 26 – ELECTRICAL

SECTION 26000 – ELECTRICAL WORK GENERAL PROVISIONS

PART 1 – GENERAL

1.01 DESCRIPTION OF WORK

A. PROVIDE ALL LABOR, MATERIALS AND EQUIPMENT FOR A COMPLETE AND OPERATING ELECTRICAL SYSTEM.

B. CODES AND STANDARDS: ALL ELECTRICAL WORK SHALL BE IN STRICT COMPLIANCE WITH OSHA REQUIREMENTS, THE LATEST VERSION OF NATIONAL ELECTRIC CODE, THE LOCAL COUNTY ELECTRICAL CODE AND POWER COMPANY STANDARDS. ALL MATERIALS SHALL BE NEW AND FREE FROM DEFECTS, AND SHALL BEAR THE UNDERWRITER'S LABEL FOR ITS INTENDED USE.

C. PERMITS, FEES AND NOTICES: SECURE AND PAY FOR ALL REQUIRED BY THE WORK OF THIS DIVISION. PROVIDE FINAL INSPECTION CERTIFICATE(S) AS APPLICABLE.

D. CONTRACTOR SHALL THOROUGHLY INVESTIGATE SITE BEFORE BIDDING. NO CHANGES WILL BE ALLOWED IN CONTRACT PRICE FOR WORK REQUIRED TO COMPLY WITH EXISTING CONDITIONS.

E. WORKMANSHIP SHALL MEET N.E.C.A. GUIDELINES.

F. IF, THROUGH ERRORS OR OMISSIONS, THE INTENT OF ARCHITECT/ENGINEER WITH REGARD TO ANY DETAIL IS NOT CLEAR, OR IS CAPABLE OF MORE THAN ONE INTERPRETATION, SUCH MATTERS MUST BE BROUGHT TO THE ATTENTION OF THE ARCHITECT/ENGINEER IN WRITING BEFORE THE SUBMISSION OF BIDS, AND THE ARCHITECT/ENGINEER SHALL MAKE CORRECTION OR EXPLANATION IN WRITING. OTHERWISE, NO EXTRA CHARGE WILL BE ALLOWED FOR THE WORK OR MATERIAL WHICH THE ARCHITECT/ENGINEER WILL REQUIRE, PROVIDED THAT IT COMES WITHIN A REASONABLE INTERPRETATION OF THE DRAWINGS AND SPECIFICATIONS.

G. THE PLANS AND SPECIFICATIONS ARE INTENDED AS A GENERAL DESCRIPTION OF THE WORK TO BE PERFORMED. ALL ITEMS NOT SPECIFICALLY MENTIONED OR SHOWN, BUT NECESSARY FOR THE COMPLETION OF THE INSTALLATION, SHALL BE FURNISHED AND INSTALLED BY THIS CONTRACTOR. THIS CONTRACTOR SHALL THOROUGHLY ACQUAINT HIMSELF WITH THE MECHANICAL, ARCHITECTURAL, STRUCTURAL AND ELECTRICAL PLANS BEFORE SUBMITTING HIS FINAL BID. NO ADDITIONAL COMPENSATION WILL BE ALLOWED DUE TO THE CONTRACTOR'S FAILURE TO FAMILIARIZE HIMSELF WITH THE PLANS.

1.02 SUBMITTAL

SUBMIT FIVE (5) COPIES OR TECHNICAL INFORMATION ON ALL MAJOR EQUIPMENT IN BINDERS. MARK-UP PRINTS OF THE DESIGN DRAWINGS WITH RED PENCIL AS ITEMS ARE INSTALLED AND SUBMIT TWO COPIES SHOWING AN ACCURATE "AS-BUILT" RECORD OF THE ENTIRE SYSTEM. GIVE THE OWNER INSTRUCTIONS IN OPERATION OF THE SYSTEM. SECURE FROM THE OWNER A SIGNED MEMO STATING THAT TECHNICAL INFORMATION, AS-BUILT DRAWINGS AND INSTRUCTIONS IN OPERATION HAVE BEEN RECEIVED. SUBMIT MEMO TO THE ARCHITECT.

PART 2 – PRODUCTS

2.01 CONDUIT

A. WHERE CONDUIT IS REQUIRED, BELOW GRADE , IT SHALL BE SCHEDULE 40 PVC. PROVIDE PULLING IN LINES IN ALL EMPTY CONDUITS. SIZE CONDUIT PER N.E.C. FOR ENCLOSED WIRING.

B. WHERE CONDUIT IS REQUIRED WITHIN UNITS, IT SHALL BE:
1. WHERE EXPOSED TO PHYSICAL DAMAGE, RIGID OR INTERMEDIATE METAL CONDUIT SHALL BE UTILIZED.
2. WHERE CONCEALED IN STRUCTURE OR CONCEALED BY FINISHES, EMT SHALL BE UTILIZED EXCEPT WHERE RIGID NONMETALLIC CONDUIT IS PERMITTED BY LOCAL AUTHORITY.

C. WHERE FLEXIBILITY IS REQUIRED AT MOTORS, FIXED APPLIANCES AND LIGHTING FIXTURES; FLEXIBLE METAL CONDUIT SHALL BE UTILIZED. FLEXIBLE CONDUIT EXPOSED TO MOISTURE SHALL BE LIQUID TIGHT FLEXIBLE METAL CONDUIT; EXCEPT WHERE LIQUID TIGHT FLEXIBLE NONMETALLIC CONDUIT IS PERMITTED BY LOCAL AUTHORITY.

D. EMT FITTINGS SHALL BE STEEL SET SCREW TYPE.

2.02 CONDUCTORS

A. ALL CONDUCTORS SHALL BE COPPER (#12 MIN.), THHN/THWN INSULATION. COMPLY WITH THE N.E.C. ARTICLES 300 AND 310. ALL CONDUCTORS SHALL BE NEW, FREE FROM KINKS AND OTHER DEFECTS WHEN INSTALLED. WHERE LOCAL AUTHORITIES PERMIT, ALUMINUM CONDUCTORS MAY BE USED FOR SERVICE ENTRANCE AND PANEL FEEDERS AS INDICATED ON RISER DIAGRAMS, BUT NEW VOLTAGE DROP CALCULATIONS MUST BE PROVIDED.

2.03 SUPPORTS

A. PROVIDE ALL SUPPORTS FOR MATERIAL AND EQUIPMENT.

2.04 COVER PLATES

A. ALL PLATES SHALL BE THERMOPLASTIC, COLOR SELECTION BY ARCHITECT.

2.05 RECEPTACLES

A. PROVIDE STANDARD GRADE 20 AMP, 2 POLE, 3 WIRE, WITH BACK AND SIDE WIRING CAPABILITY AND SUITABLE FOR SPLIT CIRCUIT OPERATION. LEVITON DECORA SERIES. COLOR SELECTION BY ARCHITECT.

B. GROUND FAULT INTERRUPTER: PROVIDE "SPECIFICATION GRADE" DUPLEX RECEPTACLES, GROUND FAULT CIRCUIT INTERRUPTERS (GFI), FEED-THRU TYPE, CAPABLE OF PROTECTING CONNECTED DOWNSTREAM RECEPTACLES ON SINGLE CIRCUIT, GROUNDING TYPE UL RATED CLASS A, 20 AMPERES RATING, 120 VOLTS, WITH SOLID STATE GROUND FAULT SENSING AND SIGNALING, 5 MILLIAMPERES GROUND FAULT TRIP LEVEL; AND EQUIP WITH LOCAL TEST/RESET BUTTONS. COLOR SELECTION BY ARCHITECT.

2.06 SWITCHES

A. PROVIDE SILENT TYPE STANDARD GRADE 20 AMP, 120V FOR ALL SINGLE POLE, DOUBLE POLE, THREE-WAY AND FOUR-WAY SWITCHES. LEVITON DECORA SERIES. COLOR SELECTION BY ARCHITECT.

2.07 LIGHTING FIXTURES

A. FIXTURE SCHEDULE SHOWS REQUIRED TYPE OF FIXTURES ONLY. DETERMINE MODIFICATIONS REQUIRED TO MAKE FIXTURES SUITABLE FOR CEILINGS AS INSTALLED, AND FURNISH FIXTURES ADAPTED TO THE CEILING USED. FIXTURES SHALL BE U.L. APPROVED. THIS CONTRACTOR SHALL PROTECT THE FIXTURES AND LAMPS AND SHALL REPLACE BROKEN PARTS. ALL LENSES AND LOUVERS IN ANY AREA SHALL BE CLEANED AFTER ALL TRADES HAVE COMPLETED THEIR WORK IN THAT AREA. PROVIDE NEW LAMPS FOR ALL LIGHTING FIXTURES.

2.08 DRIVERS FOR LED FIXTURES

A. ELECTRONIC DRIVER FOR LED FIXTURES SHALL COMPLY WITH UL 1310 CLASS 2 REQUIREMENTS FOR DRY AND DAMP LOCATIONS. PROVIDE THE FOLLOWING FEATURES:
1. RATED FOR 50,000 HOURS OF LIFE.
2. SOUND RATING: CLASS A
3. TOTAL HARMONIC DISTORTION: 20 PERCENT OR LESS.
4. CURRENT CREST FACTOR: 1.5 OR LESS.
5. 0–10V DIMMING STANDARD.

2.09 PANEL BOARDS

A. PANEL BOARDS SHALL BE SQUARE-D OR EQUAL UNITS MANUFACTURED BY G.E. OR SIEMENS. MAIN RATINGS AND BRANCH CIRCUIT BREAKER RATINGS SHALL BE OF SIZE AND NUMBER AS INDICATED ON DRAWINGS. PANEL BOARDS SHALL BE PLUG-IN TYPE CONSTRUCTION. ALL CURRENT CARRYING PARTS OF THE BUS ASSEMBLY SHALL BE COPPER. TERMINALS FOR FEEDER CONDUCTORS TO MAINS AND BRANCH NEUTRAL SHALL BE U.L. LISTED AS SUITABLE FOR THE TYPE OF CONDUCTOR SPECIFIED. THE PANEL BOARDS BUS ASSEMBLY SHALL BE ENCLOSED IN A STEEL CABINET. THE SIZE OF THE WIRING GUTTERS AND GAUGE STEEL SHALL BE IN ACCORDANCE WITH U.L. STANDARDS NO. 67 AND NO. 50. FRONTS SHALL INCLUDE DOOR AND BE PROVIDED WITH A DIRECTORY FOR CIRCUIT IDENTIFICATION (TYPEWRITTEN). PROVIDE DOOR-IN- DOOR HINGED TRIM CONSTRUCTION.

B. MOLDED CASE CIRCUIT BREAKERS (MCCB) SHALL BE SQUARE D OR APPROVED EQUAL. ALL BREAKERS SHALL BE BOLT-ON TYPE, TOGGLE ACTION WITH QUICK-MAKE, QUICK-BREAK MECHANISM. PROVIDE ADJUSTABLE MAGNETIC TRIP SETTING FOR CIRCUIT BREAKER FRAME SIZES 250A AND LARGER. ALL MULTI-POLE BREAKERS SHALL BE SINGLE-OPERATING HANDLE, COMMON- TRIP VARIETY. PROVIDE FULLY RATED SHORT CIRCUIT CURRENT RATING. CIRCUIT BREAKERS SHALL BE U.L. LISTED.

2.10 DISCONNECT SWITCHES

A. SHALL BE HEAVY DUTY SAFETY SWITCHES WITH 100,000A SHORT CIRCUIT RATING, AND SHALL BE LISTED IN ACCORDANCE WITH U.L. 98. THE COVER SHALL BE INTERLOCKED SO THAT THE DOOR CANNOT BE OPENED WITH THE HANDLE IN THE "ON" POSITION, EXCEPT BY THE INTENTIONAL OPERATION OF A CONCEALED RELEASE (DEFEATER) MECHANSM. PROVIDE FUSIBLE SWITCH FOR A/C UNITS AS PER U.L. LISTING AND LOCAL CODE REQUIREMENTS. PROVIDE DUAL ELEMENT, TIME DELAY FUSES IN ALL FUSIBLE SWITCHES.

2.12 ELECTRIC MOTOR AND EQUIPMENT WIRING

A. PROVIDE, A COMPLETE BRANCH CIRCUIT WIRING, STARTER AND DISCONNECT SWITCH FOR ALL MOTOR DRIVEN EQUIPMENT. WHEN MOTOR DRIVEN EQUIPMENT IS PROVIDED WITH "PACKAGE" CONTROL PANEL WHICH INCLUDES STARTER, THIS CONTRACTOR WILL NOT PROVIDE STARTER. MOTOR CONNECTIONS SHALL BE MADE WITH FLEXIBLE CONDUIT.

PART 3 – EXECUTION

3.01 APPARATUS IDENTIFICATION

A. PANELBOARD, CIRCUIT BREAKERS IN PANELBOARDS, MOTOR DISCONNECT SWITCHES, STARTERS AND OTHER APPARATUS USED FOR THE OPERATION OR CONTROL OF CIRCUITS, APPLIANCES OR EQUIPMENT SHALL BE PROPERLY IDENTIFIED BY MEANS OF ENGRAVED LAMINATED PLASTIC DESCRIPTIVE NAMEPLATES MOUNTED ON THE APPARATUS USING PERMANENT CONTACT CEMENT. CARDHOLDERS IN ANY FORM ARE ACCEPTABLE IN THE LIVING UNITS.

3.02 GROUNDING

A. A SEPARATE GROUNDING CONDUCTOR, SIZED IN ACCORDANCE WITH N.E.C. TABLE 250-122 SHALL BE PROVIDED IN THE CONDUIT WITH THE CIRCUIT CONDUCTORS FOR ALL LIGHTING, POWER AND FEEDER CIRCUITS.

B. ALL ELECTRICAL EQUIPMENT ENCLOSURES AND CONDUCTOR ENCLOSURES SHALL BE GROUNDED.

3.03 INSTALLATION:

A. THE CONTRACTOR SHALL ADAPT HIS WORK TO JOB CONDITIONS AND MAKE SUCH CHANGES AS REQUIRED AND PERMITTED BY THE ARCHITECT, SUCH AS MOVING HIS WORK TO CLEAR BEAMS, JOISTS, AND ADJUSTING HIS RISERS OR OTHER APPARATUS TO AVOID INTERFERENCES WITH WINDOWS AND OPENINGS; OR RAISING OR LOWERING HIS WORK TO PERMIT THE PASSING OF DUCTWORK OR THE WORK OF OTHER TRADES; ALL AS REQUIRED OR AS JOB CONDITIONS DICTATE, WITHOUT ANY ADDITIONAL COSTS TO THE OWNER.

B. EXAMINE AREAS AND CONDITIONS UNDER WHICH WORK IS TO BE PERFORMED AND PRODUCTS ARE TO BE INSTALLED AND NOTIFY GENERAL CONTRACTOR IN WRITING OF CONDITIONS DETRIMENTAL TO PROPER AND TIMELY COMPLETION OF THE WORK. DO NOT PROCEED WITH THE WORK UNTIL UNSATISFACTORY CONDITIONS HAVE BEEN CORRECTED IN A MANNER ACCEPTABLE TO THE INSTALLER.

C. DO NOT ALLOW OR CAUSE ANY OF THE WORK OF THIS DIVISION OR CAUSE OTHER DIVISIONS OF WORK TO BE COVERED UP OR ENCLOSED UNTIL IT HAS BEEN INSPECTED, TESTED AND APPROVED BY THE ARCHITECT AND BY ALL OTHER AUTHORITIES HAVING JURISDICTION.

D. ALL SWITCHBOARDS, PANELBOARDS, TRANSFORMERS, SWITCHES, OUTLETS, COVERPLATES, SIGNS, LIGHTING FIXTURES, AND ANY AND ALL OTHER ELECTRICAL EQUIPMENT PROVIDED SHALL BE THOROUGHLY CLEANED OF ALL DIRT, OIL, CONCRETE, ETC. ANY DENTS, SCRATCHES OR OTHER VISIBLE BLEMISHES SHALL BE CORRECTED AND THE APPEARANCE AND CORROSION RESISTANCE OF THE EQUIPMENT MADE "LIKE NEW", TO THE SATISFACTION OF THE ARCHITECT/ENGINEER.

E. PERFORM ALL ADJUSTMENTS NECESSARY TO ENSURE PROPER SYSTEM OPERATION IN ACCORDANCE WITH MANUFACTURERS WRITTEN INSTRUCTIONS.

END OF SECTION 26000

POWER RISER KEYNOTES (1):

1. EXISTING UTILITY COMPANY POWER POLE.
2. NEW UTILITY COMPANY POLE MOUNTED TRANSFORMER. MOUNT TO EXISTING POLE.
3. NEW SERVICE LATERAL TO NEW COMPANY METER AND METER CAN.
4. NEW COMPANY METER AND METER CAN.
5. SERVICE FEEDER TO PANEL "A". CONTRACTOR SHALL LUG ONTO METER. FEEDER CONDUIT AND WIRE SHALL BE AS FOLLOWS: 1 1/2"C, 3–#3 AWG CU AND #8 CU GROUND.
6. NEW PANEL "A", 100A MCB, 120/240V, 1ϕ, 3W.
7. NEW GROUNDING SYSTEM.

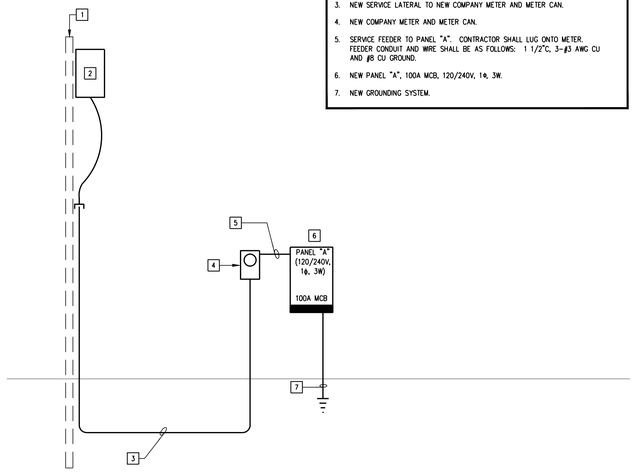

POWER RISER DIAGRAM

PANEL PANEL "A"
LOCATION MECH / ELECTRICAL
SERVICE 120/240V-1ϕ-3W
RATING 100A MAIN BREAKER
MINIMUM BREAKER AIC 10,000
MOUNTING SURFACE

NOTES

	LOAD DESCRIPTION	BKR TRIP	BKR POLES	KVA ϕA	KVA ϕB	KVA ϕC	CKT. NO.		KVA ϕA	KVA ϕB	KVA ϕC	BKR TRIP	BKR POLES	LOAD DESCRIPTION	NOTES
(1)	L-LIGHTING INTERIOR	20	1	1.57			1	2	2.76			35	2	H-CU	(2)
(1)	L-LIGHTING EXTERIOR	20	1		0.35		3	4		2.76				H-	
(1)	R-RECPTS INTERIOR EF	20	1			0.92	5	6			2.52	35	2	H-AHU	(2)
(1)	R-RECPTS EXTERIOR	20	1	0.72			7	8	2.52					H-	
	SPARE	20	1		0.00		9	10		2.25		30	2	A-WATER HEATER	(2)
	SPARE	20	1			0.00	11	12			2.25			A-	
	SPACE			0.00			13	14	0.00			20	1	SPARE	
	SPACE				0.00		15	16		0.00		20	1	SPARE	
	SPACE					0.00	17	18			0.00			SPACE	
							19	20							
							21	22							
							23	24							
							25	26							
							27	28							
							29	30							
							31	32							
							33	34							
							35	36							
							37	38							
							39	40							
							41	42							
	TOTALS			2.29	0.35	0.92			5.28	5.01	4.77				

LOAD CALCULATIONS:	CONN. LOAD – KVA	D.F.	CALC. DEMAND – KVA
LIGHTING	1.92	1.00	1.92
RECEPTACLES – 1ST 10 KVA	1.64	1.00	1.64
RECEPTACLES – ABOVE 10 KVA	0.00	0.50	0.00
HVAC	10.56	1.00	10.56
MOTORS	0.00	1.00	0.00
EQUIPMENT	0.00	1.00	0.00
APPLIANCE	4.50	0.65	2.93
SPARE/SPACE	0.00	1.00	0.00
OTHER	0.00	1.00	0.00
TOTAL KVA (AMPS)	18.62 (77.58)		17.05 (71.02)

LOADS NOT INCLUDED IN CALCULATIONS:
0.00

NOTES:
CONDUIT AND WIRE IS AS FOLLOWS:
1. 3/4"C, 2–#12 AWG CU & 1–#12 CU GROUND.
2. 3/4"C, 2–#10 AWG CU & 1–#10 CU GROUND.

1 PANEL SCHEDULE, RISER DIAGRAM, AND SPECIFICATIONS - ELECTRICAL
NTS

OCI ASSOCIATES, INC
Orlando. Fort Pierce. Fort Myers. West Palm Beach. Tampa. Washington DC. Miami. Dallas. San Francisco. Norfolk.
9728 Commerce Center Court, Ft. Myers, FL 33908 | p. 239-454-5117
www.ociassociates.com

HARVARD JOLLY ARCHITECTURE
1639 Hendry Street, Fort Myers, FL 33901 | 727-896-4611 | www.HarvardJolly.com | AAC000119

ESTERO ON THE RIVER
RESTROOM FACILITY
ESTERO, FLORIDA
CONSTRUCTION DOCUMENTS

Comm. No: 22031.01
Date: 12/09/22
Drawn: AJF

Revisions

No.	Date	Note

TO THE BEST OF MY KNOWLEDGE, THE PLANS AND SPECIFICATIONS COMPLY WITH THE MINIMUM BUILDING CODES.

KYRIAKOS G. LIATSOS, P.E.
600 S. ORLANDO AVE.
MAITLAND, FL 32751
FL. REG. NO.: P056402

PANEL, RISER SPECS - ELECTRICAL

E-601

SHOCK ARRESTOR SCHEDULE

DESIGNATION	MANUF.	SERIES	FIXTURE UNITS
A	WATTS	SS-A	1-11
B	WATTS	SS-B	12-32
C	WATTS	SS-C	33-60
D	WATTS	SS-D	61-113
E	WATTS	SS-E	114-154
F	WATTS	SS-F	155-330

PLUMBING EQUIPMENT SCHEDULE

MARK	FIXTURE DESCRIPTION	MANUFACTURES MODEL	ACCESSORIES/ NOTES
2 WAY ECO	EXTERIOR WALL CLEANOUT	WATTS CO-200-RX-4	-
WCO	WALL CLEANOUT	WATTS CO-590-RD	-
WH-1	WALL HYDRANT	WATTS HY-430	MODERATE CLIMATE WITH VACUUM BREAKER
CS-1	THERMOSTATIC BALANCING VALVE	CIRCUIT SOLVER CSUAS-1/2-130-CV1	INCLUDES BALL VALVES, STRAINER AND CHECK VALVE. SET TEMP. TO 130° F.
FD-1	FLOOR DRAIN	ZURN ZN415B (5" DIA. STRAINER)	PROVIDE JAY R. SMITH QUAD CLOSE TRAP SEAL DEVICE (ASSE 1072 RATED) PROPERLY SIZED FOR DRAIN.
FD-2	FLOOR DRAIN	ZURN Z415B-HD (6" DIA. HEAVY DUTY GRATE)	PROVIDE JAY R. SMITH QUAD CLOSE TRAP SEAL DEVICE (ASSE 1072 RATED) PROPERLY SIZED FOR DRAIN.

ELECTRIC WATER HEATER SCHEDULE

MARK	FIXTURE DESCRIPTION	MANUFACTURER MODEL	GALLON CAPACITY	SET TEMPERATURE	ELECTRICAL DATA			ACCESSORIES
					VOLT	PHASE	kW	
EWH-1	ELECTRIC TANK WALL HUNG WATER HEATER	A.O. SMITH #DEL30	30	140°	240	1	4.5	TWO ELEMENTS, NON-SIMULTANEOUS OPERATION

NOTES:

- PROVIDE ALL GAUGES, HEAT TRAPS, THERMOSTATS, TEMPERATURE AND PRESSURE RELIEF VALVE AND SHUT-OFF VALVES AS REQUIRED BY LOCAL CODES AND MANUFACTURER'S RECOMMENDATIONS.

RECIRCULATION PUMP SCHEDULE

MARK	FIXTURE DESCRIPTION	MANUFACTURES MODEL	HP	RPM	GPM/ TDH	ELECTRICAL DATA			ACCESSORIES
						VOLT	PHASE	HZ	
RCP-1	RECIRCULATION PUMP	TACO #003-ST4	1/40	3250	1.5/2.5	115	1	60	PROVIDE TACO AQUASTAT.

NOTES:

- PROVIDE ALL GAUGES, UNIONS, THERMOSTATS, VALVE AND SHUT-OFF VALVES AS REQUIRED BY LOCAL CODES AND MANUFACTURER'S RECOMMENDATIONS.
- COORDINATE WITH DIVISION 16 CONTRACTOR.
- PUMP SHALL BE STAINLESS STEEL.

PLUMBING FIXTURE SCHEDULE

MARK	FIXTURE DESCRIPTION	MANUFACTURER MODEL	FAUCET/ FLUSH FLUSH VALVE MODEL	FIXTURE CONNECTION SIZES					ACCESSORIES
				C.W.	H.W.	MIXED	WASTE	VENT	
WC-1	ADA WATER CLOSET FLOOR SET FLUSH VALVE	AMERICAN STANDARD MADERA FLOWISE MODEL# 3043.001 1.28 GPF	WATER CLOSET MODEL NUMBER INCLUDES SLOAN ROYAL FLUSH 111 SMOOTH 1.28 BATTERY SENSOR FLUSH VALVE	1"	-	-	4"	2"	KOHLER ELONGATED OPEN FRONT SEAT LESS COVER #K-4731-GC.
UR-1	ADA URINAL FLUSH VALVE	AMERICAN STANDARD #6541.132	WATER CLOSET MODEL NUMBER INCLUDES SLOAN ROYAL FLUSH 186 SMOOTH BATTERY SENSOR FLUSH VALVE (0.5 GPM)	3/4"	-	-	2"	2"	REFER TO ARCH. PLANS FOR MOUNTING HEIGHT.
L-1	ADA LAVATORY WALL HUNG	SLOAN AER-DEC MODEL AD-81000	SLOAN FAUCET OPTIMA BATTERY POWER DECK MODEL#EAF-250 (0.5 GPM)	1/2"	-	1/2"	1-1/2"	1-1/2"	PROVIDE WITH OFFSET GRID DRAIN, PROVIDE CHROME PLATED WALL NIPPLES AND ESCUTCHEONS, MCGUIRE HEAVY PATTERN #2165 CHROME PLATED ANGLE STOPS, MCGUIRE 8872 P-TRAP AND CLEANOUT PLUG. THERMOSTATIC MIXING VALVE LAWLER MODEL # TMM-1070. PROVIDE 0.5 GPM AERATOR #K-1336292.
L-2	LAVATORY WALL HUNG	SLOAN SLOANSTONE ELC-81000	SLOAN FAUCET OPTIMA BATTERY POWER DECK MODEL# EAF-250 (0.5 GPM)	1/2"	-	1/2"	1-1/2"	1-1/2"	PROVIDE CHROME PLATED WALL NIPPLES AND ESCUTCHEONS, MCGUIRE HEAVY PATTERN #2165 CHROME PLATED ANGLE STOPS, MCGUIRE 8872 P-TRAP AND CLEANOUT PLUG. THERMOSTATIC MIXING VALVE LAWLER MODEL # TMM-1070.. PROVIDE 0.5 GPM AERATOR #K-1336292.
EWC-1	ELECTRICAL WATER COOLER WALL HUNG	ELKAY VRC8TLWS W/ BOTTLE FILLER	-	1/2"	-	1/2"	1-1/2"	1-1/2"	CONTRACTOR TO COORDINATE ELECTRICAL REQUIREMENT WITH ELECTRICAL CONTRACTOR.

NOTES:

- FIXTURES TO BE WHITE IN COLOR UNLESS OTHERWISE NOTED.
- ADA WATER CLOSET SHALL HAVE FLUSH HANDLE ON OPEN SIDE OF TOILET STALL.
- ADA LAVATORIES AND SINKS SHALL HAVE TRAP INSULATION KIT TO COVER P-TRAP AND SUPPLIES.
- ADA FIXTURES MOUNTING HEIGHT PER LOCAL, STATE HANDICAP CODES.
- CONTRACTOR TO PROVIDE TRAP, CARRIER, SUPPLIES LINES AND DRAINS REQUIRED BY FIXTURES.

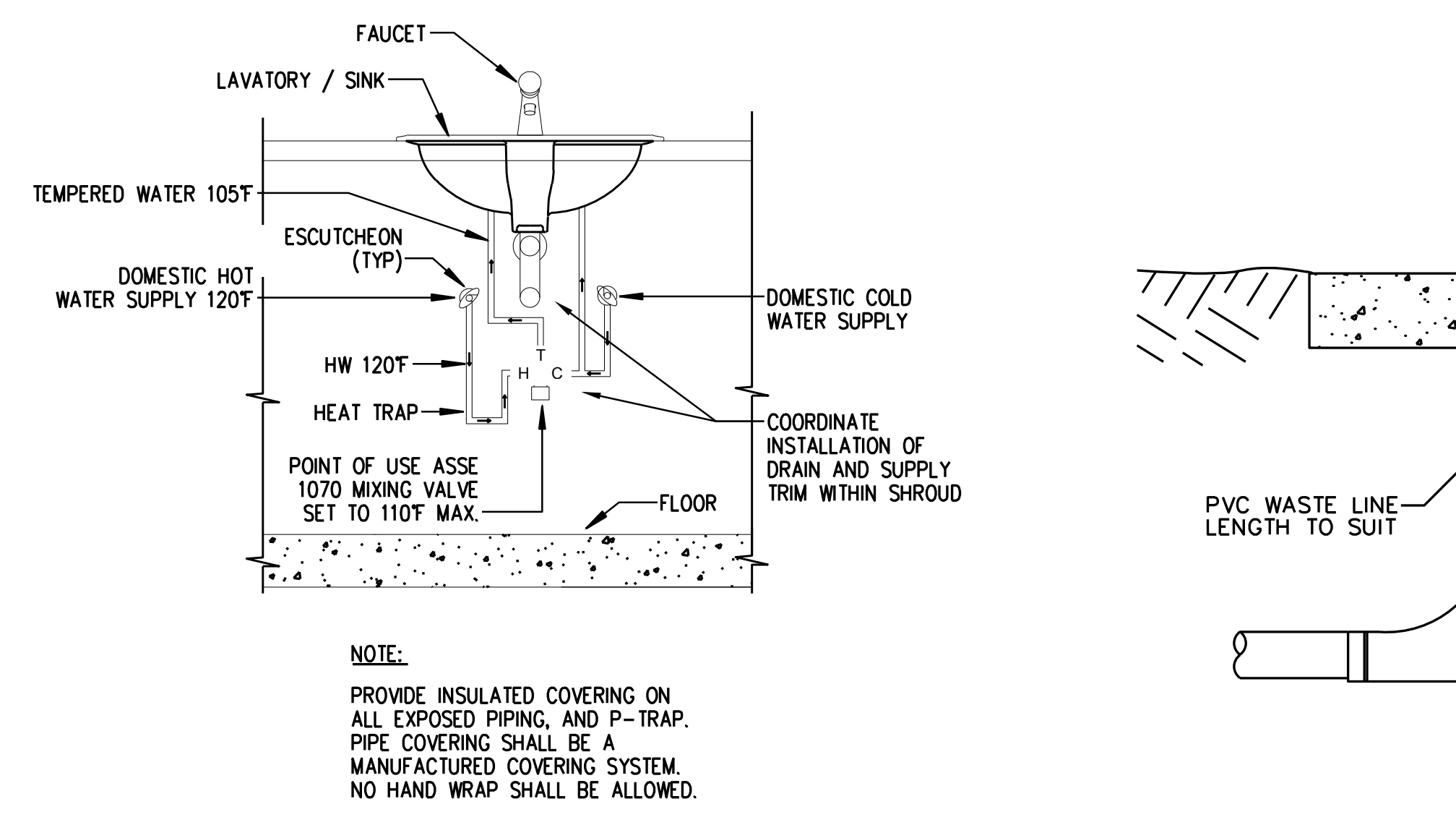

NOTE:

PROVIDE INSULATED COVERING ON ALL EXPOSED PIPING, AND P-TRAP. PIPE COVERING SHALL BE A MANUFACTURED COVERING SYSTEM. NO HAND WRAP SHALL BE ALLOWED.

MIXING VALVE AT LAV FAUCET DETAIL

NTS

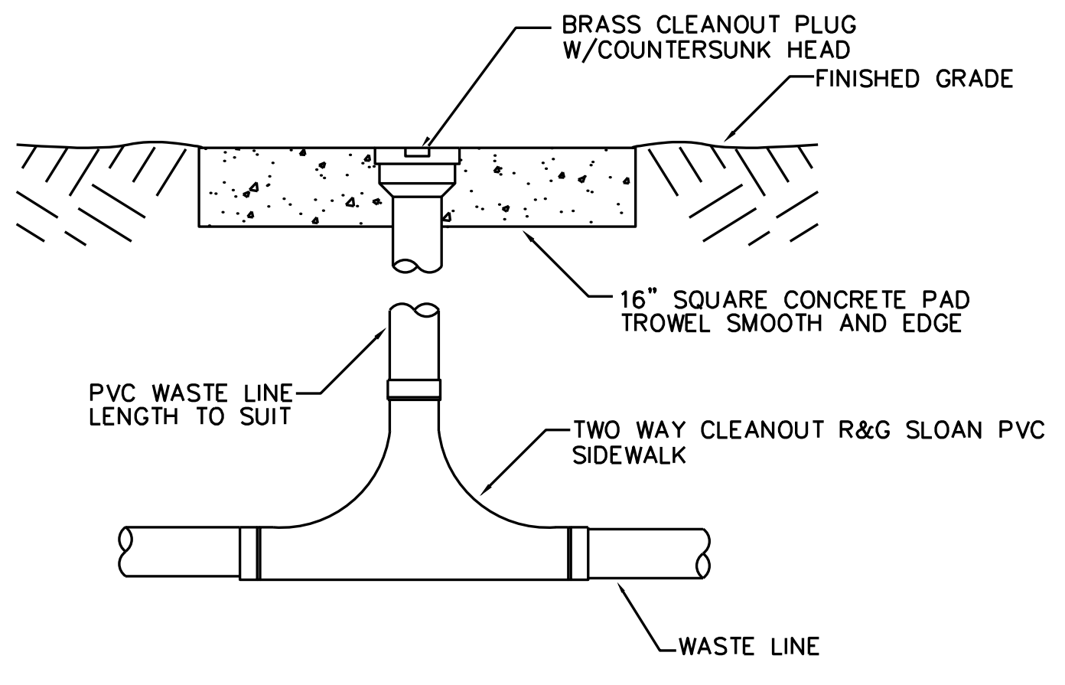

2-WAY CLEANOUT DETAIL (COTG)

NTS

ABBREVIATIONS

AAV	AIR ADMITTANCE VALVE
AC	ABOVE CEILING
BF	BELOW FLOOR
BG	BELOW GRADE
EWH	ELECTRIC WATER HEATER
TV	TEMPERING VALVE (THERMOSTATIC)
GPM	GALLONS PER MINUTE
HW	DOMESTIC HOT WATER
HWR	DOMESTIC HOT WATER RETURN
L	LAVATORY
MS	MOP SINK
EWC	ELECTRIC WATER COOLER
FD	FLOOR DRAIN
VTR	VENT THRU ROOF
WC	WATER CLOSET
WH	WATER HYDRANT

GENERAL LEGEND

—▶—	DIRECTION OF FLOW IN PIPE
—○	PIPE UP
—⊃	PIPE DOWN
	BALL VALVE
	CHECK VALVE, HORIZONTAL SWING
—⋈—	GATE VALVE
	BALANCING VALVE
	RECIRCULATION PUMP
—⊠—	VALVE IN SERVICE BOX WITH HEAVY DUTY COVER
ECO ⊘	EXTERIOR CLEANOUT
⊘	EXTERIOR 2-WAY CLEANOUT
WCO ‖—○	WALL CLEANOUT
	CAPPED LINE
○—+	HOSE BIBB
	WATER HAMMER
— - —	DOMESTIC COLD WATER PIPING
— - - —	DOMESTIC HOT WATER PIPING
— 130 —	DOMESTIC HOT WATER RETURN PIPING
—SAN—	SOIL, WASTE, OR SANITARY SEWER PIPING
— — —	VENT PIPING
—COND—	CONDENSATE PIPING
—ST—	STORM PIPING
1	DETAIL OR RISER DESIGNATION
P6.01	SHEET WHERE DETAIL OR RISER APPEAR

PLUMBING SPECIFICATIONS

SECTION 220100 - GENERAL PROVISIONS FOR PLUMBING WORK:

DO ALL WORK IN COMPLIANCE WITH ALL APPLICABLE CODES, LAWS AND ORDINANCES, THE FLORIDA BUILDING CODE AND THE REGULATIONS OF THE LOCAL UTILITY COMPANIES. OBTAIN AND PAY FOR ANY AND ALL REQUIRED PERMITS, INSPECTIONS, CERTIFICATES OF INSPECTIONS.

COOPERATE WITH OTHER TRADES AND CONTRACTORS AT JOB. PERFORM WORK IN SUCH MANNER AND AT SUCH TIMES AS NOT TO DELAY WORK OF OTHER TRADES.

OBTAIN MANUFACTURER'S DATA ON ALL EQUIPMENT, THE DIMENSIONS OF WHICH MAY AFFECT INSTALLATION. USE THIS DATA TO COORDINATE PROPER SERVICE CHARACTERISTICS, ENTRY LOCATIONS, ETC., AND TO INSURE MINIMUM CLEARANCES ARE MAINTAINED.

WORKMAN SHALL BE EXPERIENCED IN THEIR RESPECTIVE TRADE. WORKMANSHIP OF INSTALLED WORK SHALL BE FIRST CLASS AND WILL BE SO JUDGED. SUB-STANDARD WORK SHALL BE REMOVED AND REPLACED AT CONTRACTOR'S EXPENSE.

CONTRACTOR SHALL AND DOES HEREBY WARRANT ALL MATERIALS AND EQUIPMENT FURNISHED UNDER THIS SECTION TO BE FREE FROM DEFECTS AND TO FUNCTION OR OPERATE SATISFACTORILY FOR ONE YEAR AFTER FINAL ACCEPTANCE OF THE WORK, AND THAT ANY ITEMS NOT MEETING THIS REQUIREMENT WILL BE MADE GOOD BY HIM WITHOUT ANY COST TO THE OWNER.

PROVIDE ONLY NEW, STANDARD FIRST-GRADE MATERIALS THROUGHOUT, CONFORMING TO STANDARDS ESTABLISHED BY UNDERWRITER LABORATORIES INC., ANS SO MARKED AND LABELED, TOGETHER WITH MANUFACTURER'S BRAND OR TRADEMARK. ALL LIKE ITEMS SHALL BE OF ONE MANUFACTURER.

ALL WORK SHALL BE EXECUTED IN A MANNER THAT SHALL PRESENT A NEAT APPEARANCE UPON COMPLETION. CARE SHALL BE EXERCISED THAT ALL ITEMS ARE PLUMB, STRAIGHT AND LEVEL.

UPON COMPLETION OF WORK, ALL SYSTEMS SHALL BE TESTED, AND SHALL BE SHOWN TO BE IN PERFECT WORKING CONDITION IN ACCORDANCE WITH THE INTENT OF THE DRAWINGS.

ANY WALLS, CEILINGS, EQUIPMENT, ETC., DAMAGED BY THE CONTRACTOR IN CONSTRUCTION OF THIS PROJECT SHALL BE REPAIRED, RESTORED AND/OR REPLACED BY THE CONTRACTOR TO ITS ORIGINAL CONDITION, OR TO PERFORM ITS INTENDED FUNCTION, AT NO ADDITIONAL COST TO OWNER.

ALL PIPING SHALL BE CONCEALED ABOVE CEILINGS WHERE APPLICABLE. ALL PIPING SHALL BE INSTALLED PARALLEL AND PERPENDICULAR TO THE BUILDING WALLS.

ALL EQUIPMENT SHALL BE GUARANTEED FOR A PERIOD OF ONE (1) YEAR FROM THE DATE OF ACCEPTANCE, AS EVIDENCED BY DATE OF CERTIFICATE FOR FINAL PAYMENT, AGAINST DEFECTIVE MATERIALS, DESIGN AND WORKMANSHIP. IN ADDITION TO THE GUARANTEE, THE CONTRACTOR SHALL PROVIDE ALL REPAIR AND ADJUSTMENT SERVICE NECESSARY FOR THE PROPER OPERATION OF THE ENTIRE SYSTEM FOR A PERIOD OF ONE (1) YEAR AFTER THE SYSTEM IS PUT INTO OPERATION (CONCURRENT WITH THE GUARANTEE). UPON RECEIPT OF NOTICE FROM THE OWNER'S REPRESENTATIVE OF FAILURE OF ANY PART OF THE GUARANTEED EQUIPMENT DURING THE GUARANTEE PERIOD, THAT AFFECTED PART SHALL BE REPLACED PROMPTLY WITH A NEW PART WITHOUT COST TO THE OWNER. UPON FAILURE TO TAKE ACTION WITHIN 24 HOURS AFTER BEING NOTIFIED, THE WORK WILL BE ACCOMPLISHED BY THE ARCHITECT AT THE EXPENSE OF THE CONTRACTOR.

SECTION 220529 - SUPPORTS AND ANCHORS:

PIPE HANGERS AND SUPPORTS HANGERS FOR PIPE SIZES 1/2 TO 1-1/2 INCH: MALLEABLE IRON/CARBON STEEL, ADJUSTABLE SWIVEL, SPLIT RING.

COPPER PIPE SUPPORT: CARBON STEEL RING, ADJUSTABLE COPPER PLATED.

STEEL HANGER RODS: THREADED BOTH ENDS, THREADED ONE END, OR CONTINUOUS THREADED. INSERTS: MALLEABLE IRON CASE OF GALVANIZES STEEL SHELL AND EXPANDER PLUG FOR THREADED CONNECTION WITH LATERAL ADJUSTMENT, TOP SLOT FOR REINFORCING RODS, LUGS FOR ATTACHING TO FORMS; SIZE INSERTS TO SUIT THREADED HANGER RODS.

BEAM CLAMPS SHALL HAVE MALLEABLE IRON JAWS, STEEL BOLT OR TIE ROD AND NUT.

HORIZONTAL HANGER SPACING SHALL BE PER PIPE MFGR'S RECOMMENDATIONS OR CODE; WHICHEVER IS MOST STRINGENT.

SECTION 220719 - PIPING INSULATION

FIBERGLASS: OWENS CORNING, KNAUF, CERTAINTEED, OR MANVILLE.

ABOVE GROUND DOMESTIC HOT WATER AND DOMESTIC HOT WATER RECIRCULATION PIPING AND HORIZONTAL STORM PIPING SHALL BE INSULATED WITH ASJ FIBERGLASS PIPE INSULATION. PRIOR TO INSTALLING THE INSULATION, THE PRESSURE RELEASE PAPER SHALL BE REMOVED FROM THE JACKET LAPS. THE INSULATION SHALL BE SECURED IN PLACE BY APPLYING PRESSURE TO THE PRESSURE SENSITIVE CLOSURE SYSTEM. ALL FITTINGS SHALL BE INSULATED WITH MOLDED FIBERGLASS PIPE INSULATION SEGMENTS AND FINISHED WITH FOSTER'S 30-35 VAPOR BARRIER COATING OR EQUAL, REINFORCED WITH A LAYER OF WHITE OPEN WEAVE GLASS FABRIC.

DOMESTIC HOT WATER AND HOT WATER RECIRCULATION PIPE SIZES 1-1/4 INCHES AND SMALLER SHALL HAVE 1 INCH THICKNESS INSULATION UNLESS NOTED ON THE DRAWINGS.

DOMESTIC HOT WATER PIPE SIZES 1-1/2 INCHES AND LARGER SHALL HAVE 1-1/2 INCH THICKNESS INSULATION.

HORIZONTAL STORM PIPING SHALL BE INSULATED WITH 1/2" THICKNESS INSULATION

SECTION 221116 - PLUMBING PIPING

SANITARY SEWER AND STORM PIPING:
PVC PIPE: SOLID WALL ASTM D2665 SCH 40. FITTINGS: PVC. JOINTS: ASTM D2855, SOLVENT WELD.
CAST IRON PIPE: ASTM A74, SERVICE WEIGHT. FITTINGS, CAST IRON. JOINTS, BELL-AND-SPIGOT PUSH-ON TYPE NEOPRENE GASKET BELOW GRADE; NO-HUB TYPE CONFORMING TO CISPI STANDARD 301 WITH HEAVY DUTY COUPLINGS ABOVE GRADE.
PVC PIPE SHALL NOT BE USED IN FIRE WALL PENETRATIONS AND CEILING RETURN PLENUMS WHERE NOT PERMITTED BY BUILDING CODE.

DOMESTIC WATER PIPING ABOVE GRADE WITHIN BUILDING: CPVC ASTM F/F441M, SCHEDULE 80, CPVC SOCKET FITTING: ASTM F 439 FOR SCHEDULE 80, CPVC THREADED FITTING: ASTM F 437, SCHEDULE 80, CPVC PIPING SYSTEM: ASTM D 2846/D 2846M, SDR 11 PIPE AND SOCKET FITTING, CPVC TUBING SYSTEM: ASTM D 2846/D 2846M, SDR 11, TUBE AND SOCKET FITTINGS.

DOMESTIC WATER PIPING BELOW GRADE OR BELOW BUILDING FLOOR SLAB: COPPER TUBING CONFORMING TO ASTM B88, TYPE K WITH SOLDERED FITTINGS AND JOINTS AS NOTED ABOVE.

DIELECTRIC CONNECTIONS: UNION WITH GALVANIZED OR PLATED STEEL THREADED END, COPPER SOLDER END, WATER IMPERVIOUS ISOLATION BARRIER.

BALL VALVES UP TO 2 INCHES: FULL PORT BRONZE/STAINLESS STEEL BODY, STAINLESS STEEL BALL, TEFLON SEATS AND STUFFING BOX RING, LEVER HANDLE AND BALANCING STOPS/SOLDER/THREADED ENDS WITH UNION.

SWING CHECK VALVES UP TO 2 INCHES: BRONZE 45/22 DEGREE SWING DISC, SOLDER/SCREWED ENDS.

EXECUTION:

REAM PIPE AND TUBE ENDS. REMOVE BURRS. BEVEL PLAIN END FERROUS REMOVE SCALE AND DIRT, ON INSIDE NAD OUTSIDE, BEFORE ASSEMBLY.

PREPARE PIPING CONNECTIONS TO EQUIPMENT WITH FLANGES OR UNIONS. PROVIDE NON-CONDUCTING DIELECTRIC CONNECTIONS WHEREVER JOINTING DISSIMILAR METALS.

ROUTE PIPING IN ORDERLY MANNER AND MAINTAIN GRADIENT. INSTALL BALL VALVES FOR SHUT-OFF AND TO ISOLATE EQUIPMENT, PART OF SYSTEMS, OR VERTICAL RISERS.

DISINFECTION OF DOMESTIC WATER PIPING SYSTEM: PRIOR TO STARTING WORK, VERIFY SYSTEM IS COMPLETE, FLUSHED AND CLEAN. ENSURE PH OF WATER TO BE TREATED IS BETWEEN 7.4 AND 7.6 BY ADDING ALKALI (CAUSTIC SODA OR SODA ASH) OR ACID (HYDROCHLORIC). INJECT DISINFECTANT, FREE CHLORINE IN LIQUID, POWDER, TABLET OR GAS FORM, THROUGHOUT SYSTEM TO OBTAIN 50 TO 80L MG/L RESIDUAL. BLEED WATER FROM OUTLETS TO ENSURE DISTRIBUTION AND TEST FOR DISINFECTANT RESIDUAL AT MINIMUM 15 PERCENT OF OUTLETS. MAINTAIN DISINFECTANT IN SYSTEM FOR 24 HOURS. IF FINAL DISINFECTANT RESIDUAL TEST LESS THAN 25 MG/L, REPEAT TREATMENT. FLUSH DISINFECTANT FROM SYSTEM UNTIL RESIDUAL EQUAL TO THAT OF INCOMING WATER OR 1.0 MG/L.

SECTION 224100 - PLUMBING FIXTURES AND EQUIPMENT

PROVIDE FIXTURES, EQUIPMENT, ACCESSORIES, TRIM, ETC WHERE SPECIFIED ON DRAWINGS OR APPROVED EQUAL.

FIXTURE SUPPLY STOPS SHALL BE HEAVY PATTERN.

PROVIDE CHROME PLATED ESCUTCHEONS AT EXPOSED PIPE PENETRATIONS OF WALLS AND CEILINGS.

GENERAL NOTES

1. EACH CONTRACTOR, PROPOSER, SUPPLIER AND/OR MANUFACTURER SHALL REFER TO ALL DOCUMENTS PERTAINING TO THIS PROJECT AND COORDINATE ACCORDINGLY SO AS TO INSURE ADEQUACY OF FIT, COMPLIANCE WITH SPECIFICATIONS, PROPER VOLTAGE AND CURRENT CHARACTERISTICS TO AVOID CONFLICTS WITH ANY OTHER BUILDINGS SYSTEMS. VERIFY SAME WITH SHOP DRAWINGS.
2. INSTALL NO PIPING, CONDUIT, DUCTWORK, ETC. IN A LOCATION OR IN A MANNER WHICH WILL ALLOW FREEZING AND THE COLLECTION OF CONDENSATION THEREON. IF IN DOUBT, CONTACT THE ARCHITECT.
3. ADVISE ARCHITECT OF ANY CONFLICTS, ERRORS, OMISSIONS, ETC.. AT LEAST TEN DAYS PRIOR TO BID DATE, TO ALLOW CLARIFICATIONS BY WRITTEN ADDENDUM.
4. DEVIATIONS FROM SPECIFICATIONS OR PLANS REQUIRES PRIOR WRITTEN APPROVAL FROM THE ARCHITECT AND MUST BE SUBMITTED IN WRITING NO LATER THAN TEN DAYS PRIOR TO THE BID DATE.
5. OBSERVE ALL APPLICABLE CODES, RULES AND REGULATIONS THAT MAY APPLY TO THE WORK UNDER THIS CONTRACT. (CITY,COUNTY, LOCAL, STATE, FEDERAL, MUNICIPALITY, UTILITY COMPANY, OSHA, ETC..)
6. INSTALL EQUIPMENT, MATERIALS, ETC.. IN STRICT ACCORD WITH MANUFACTURERS' RECOMMENDATIONS AND DIRECTIONS. IF IN CONFLICT WITH THE DESIGN INTENT IN CONTRACT DOCUMENTS, ADVISE THE ARCHITECT PRIOR TO INSTALLATION FOR CLARIFICATIONS.
7. ALL SYSTEMS, EQUIPMENT, AND MATERIALS ARE TO BE INSTALLED IN A NEAT AND WORKMANLIKE MANNER. WORK NOT MEETING THIS CRITERION SHALL BE REMOVED AND REINSTALLED SATISFACTORILY. FINAL DETERMINATION OF THE ACCEPTABILITY OF THE QUALITY OF WORK RESIDES WITH THE ARCHITECT.
8. ALL WORK, MATERIALS, EQUIPMENT, ETC. SHALL BE FULLY GUARANTEED FOR ONE FULL CALENDAR YEAR FROM THE DATE OF SUBSTANTIAL COMPLETION AS DOCUMENTED BY THE ARCHITECT, UNLESS LONGER WARRANTY PERIODS FOR EQUIPMENT ARE SPECIFIED.
9. UNLESS OTHERWISE SPECIFIED OR INDICATED, ALL EQUIPMENT AND/OR MATERIALS WITHIN OCCUPIED SPACES OR EXPOSED TO VIEW ON THE BUILDING EXTERIOR SHALL BE PRIMED AND FINISHED SO AS TO COMPLEMENT ADJACENT SURFACE, UNLESS OTHERWISE NOTED. COORDINATE WORK WITH ARCHITECT.
10. ALL ELECTRICAL COMPONENTS OR EQUIPMENT SHALL BE LABELED BY UNDERWRITER'S LABORATORIES OR OTHER APPROVED LISTING AGENCY. APPROVED AND LABELING OF INDIVIDUAL COMPONENTS ON AN ASSEMBLY IS NOT ACCEPTABLE AS MEETING THIS REQUIREMENT, UNLESS WAIVED BY THE ARCHITECT IN WRITING.
11. ALL CONTRACTORS SHALL EXERCISE EXTREME CARE IN THE COURSE OF THEIR WORK SO AS TO INSURE THAT THEY DO NOT INTERRUPT ANY EXISTING SERVICE OR SUB-SERVICE FOR SAFETY PURPOSES, PAY PARTICULAR ATTENTION TO THIS PRECAUTION RELATIVE TO NATURAL GAS AND ELECTRIC LINES. VERIFY THE LOCATION, SIZE TYPE, ETC. OF EACH UNDERGROUND OR OVERHEAD UTILITY. ALL WORK SHALL BE PERFORMED IN ACCORDANCE WITH ALL FEDERAL, STATE AND/OR LOCAL RULES, REGULATIONS, STANDARDS AND SAFETY REQUIREMENTS. UTILITIES SHALL BE INSTALLED IN ACCORDANCE WITH THE APPLICABLE MUNICIPALITY OR UTILITY COMPANY STANDARDS. IN ALL CASES, THE MOST STRINGENT REQUIREMENTS SHALL APPLY.
12. ALL SUPPORTS FOR EQUIPMENT, DEVICES OR FIXTURES SHALL BE UNIQUE, SUPPORT FROM THE BUILDING STRUCTURE. DO NOT SUPPORT WORK FROM OTHER TRADES, EQUIPMENT OR SUPPORTS WITHOUT WRITTEN PERMISSION FROM THE ARCHITECT AND CONSENT OF THE OTHER TRADE, IN WRITING.
13. WHERE INTERRUPTING AN EXISTING UTILITY OR SERVICE DELIBERATELY OR ACCIDENTALLY THE RESPONSIBLE CONTRACTOR SHALL WORK CONTINUOUSLY AS NEEDED TO RESTORE SAME PROVIDING PREMIUM TIME AS NEEDED.
14. WHERE PENETRATING ROOFING MEMBRANE OR OTHER MATERIALS USED FOR WEATHERPROOFING THE BUILDING, MAKE SUCH PENETRATION IN A WAY THAT WILL NOT VOID OR DIMINISH THE ROOFING WARRANTY OR INTEGRITY IN ANYWAY. COORDINATE ALL SUCH PENETRATIONS WITH THE ARCHITECT.
15. DEVIATIONS IN SIZE, CAPACITIES, FIT, FINISH, ETC. FOR EQUIPMENT FROM THAT PRIME SPECIFIED SHALL BE THE RESPONSIBILITY OF THE PURCHASER OF THAT EQUIPMENT. ANY PROVISIONS REQUIRED TO ACCOMMODATE A DEVIATION, WHETHER APPROVED BY THE ARCHITECT OR NOT SHALL BE THE RESPONSIBILITY OF THE PURCHASER.
16. INTERRUPTION OF ANY EXISTING SERVICES SHALL BE COORDINATED WITH THE GENERAL CONTRACTOR, UTILITY COMPANY, ARCHITECT, AND OWNER AS NECESSARY, WITH AT LEAST ONE WEEK IN ADVANCE OF ANTICIPATED INTERRUPTION. A SCHEDULE FOR THESE OUTAGES SHALL BE DEVELOPED AND AGREED UPON BETWEEN PARTIES MENTIONED, TO AVOID UNNECESSARY INCONVENIENCE TO THE OWNER OR ANY AFFECTED PARTY. NOTIFY THE UTILITY COMPANY OF ANY ANTICIPATED SERVICES REQUIRED TWO WEEKS IN ADVANCE, IN WRITING. IF UTILITY COMPANY REQUIRES A LONGER NOTIFICATION PERIOD, SO PROVIDE.
17. ALL WORK SHALL BE CONCEALED UNLESS SPECIFICALLY INDICATED TO BE EXPOSED, OR REQUIRED TO BE EXPOSED. IF IN DOUBT, CONTACT THE ARCHITECT FOR CLARIFICATION PRIOR TO INSTALLING ANY SUCH WORK.
18. DO NOT SCALE FROM DRAWINGS, AS PRINTING DISTORTS SCALE, WORK SHALL BE LAID OUT FROM DIMENSIONED DRAWINGS, OR DIMENSIONED SUPPLIED TO THE CONTRACTOR.
19. IT IS NOT INTENDED THAT THE PLANS SHOW ALL OFFSETS IN PIPES, CONDUITS, AND DUCTS REQUIRED FOR INSTALLATION OF THE WORK DETAILS AND SECTIONS ARE INCLUDED FOR SOME AREAS TO SHOW INTENDED RELATIONSHIP OF THE WORK OF VARIOUS TRADES. IT SHALL BE THE RESPONSIBILITY OF THE CONTRACTOR AND SUB-CONTRACTORS TO COORDINATE INSTALLATION OF THE WORK AND TO PROVIDE THE NECESSARY OFFSETS, TRANSFORMATIONS, AND FITTINGS REQUIRED. NO ADDITIONAL COMPENSATION WILL BE ALLOWED FOR CORRECTING CONFLICTS BETWEEN THE WORK OF VARIOUS TRADES. DETAILS AND SECTIONS ARE SHOWN FOR THE CONTRACTORS' CONVENIENCE AND SHALL NOT BE CONSIDERED COMPLETE IN EVERY DETAIL.
20. ALL WORK SHOWN ON DRAWINGS (EQUIPMENT, DUCTWORK, PIPING FIXTURES, RACEWAYS, WIRING, ETC.) ARE NEW, TO BE FURNISHED AND INSTALLED BY THE CONTRACTOR UNLESS NOTED OTHERWISE.
21. ALL PIPING SHALL BE INSTALLED AS HIGH AS POSSIBLE. COORDINATION WITH ALL TRADES WILL BE REQUIRED.
22. WATER HAMMER ARRESTORS, TRAP PRIMERS, VALVES, ETC. SHALL BE ACCESSIBLE. PROVIDE ACCESS PANELS WHERE ANY ITEM IS INSTALLED IN AN INACCESSIBLE SPACE.
23. INSULATE HOT WATER AND HOT WATER RECIRCULATING PIPING IN ACCORDANCE WITH FLORIDA ENERGY EFFICIENCY CODE.
24. METALLIC PIPING SHALL BE INSTALLED IN FIRE RATED WALL. (TYPICAL)
25. SEAL ALL PIPING PENETRATIONS WITH NON-SHRINK MASTIC.
26. DOMESTIC WATER PIPING WITHIN 5 FEET OF THE BUILDING SEWER/DRAIN PIPING IS TO BE A MINIMUM OF 12 INCHES ABOVE THE HIGHEST POINT OF THE BUILDING SEWER/DRAIN PIPING AND THE PIPE MATERIALS MUST CONFORM TO THE FLORIDA BUILDING CODE 2020 - PLUMBING.
27. PLUMBING CONTRACTOR SHALL COORDINATE UNDERGROUND PIPE ROUTINGS WITH BUILDING FOUNDATIONS PRIOR TO INSTALLATION OF PIPING AND FOUNDATIONS.
28. WHERE PIPING PENETRATES FOOTING, REFER TO STRUCTURAL DRAWINGS FOR SLEEVING METHODS.
29. WHERE INVERT ELEVATIONS ARE HIGHER ON PLUMBING DRAWINGS, PLUMBING CONTRACTOR SHALL INSTALL PIPING AS PER THE PLUMBING CONTRACT DRAWINGS AND PROVIDE A 45° DROP TO MEET THE CIVIL ENGINEERS POINT OF CONNECTION. IF ANY CONFLICTS ARISE WHERE CIVIL ENGINEERS' POINT OF CONNECTIONS ARE SHALLOWER THAN ON THE PLUMBING CONTRACT DOCUMENTS, PLUMBING CONTRACTOR SHALL CONTACT THE ARCHITECT/ENGINEER.
30. SUPPLY AND TRAP WRAPS SHALL BE PROVIDED AT ADA LAVATORIES AND SINKS WHERE PIPING IS EXPOSED.
31. WHERE PIPING IS NEAR ROOF ACCESS HATCH CONTRACTOR SHALL ROUTE ALL PIPING TO CLEAR ALL LADDERS AND OPENINGS.
32. COORDINATE VENT THRU ROOF WITH ALL EQUIPMENT. WHERE PIPING IS WITHIN 10'-0" OF EQUIPMENT, LOUVERS ECT. VENT THRU ROOF SHALL BE MOVED TO MAINTAIN A 10'-0" CLEARANCE OF OUTSIDE AIR OPENING.
33. P-TRAPS INSTALLED ON ALL FLOOR DRAINS SHALL BE DEEP SEAL TRAPS.
34. PROVIDE ROUGH-IN AND FINAL CONNECTIONS FOR ALL PLUMBING UTILITIES AND SERVICES FOR EQUIPMENT PROVIDED BY OTHERS.
35. PROVIDE WATER HAMMER ARRESTOR ON ALL BRANCH PIPING SERVING QUICK CLOSING FIXTURES AND EQUIPMENT SUCH AS SENSOR OPERATED FIXTURES, ICE MACHINES, KITCHEN WASHERS, ETC. SIZED PER PDI GUIDELINES.
36. COORDINATE UNDERGROUND PLUMBING PIPING WITH STRUCTURAL FOUNDATION PLANS PRIOR TO INSTALLATION OF FOUNDATION OR PIPING. COORDINATE ANY CHANGES TO FOUNDATION WITH STRUCTURAL ENGINEER OF RECORD REQUIRED TO COORDINATE WITH PLUMBING INSTALLATION. AVOID PENETRATION OF FOUNDATION STRUCTURES (FOOTINGS, ETC.) UNLESS PRE-APPROVED, SLEEVED AND INSTALLED PER STRUCTURAL ENGINEER'S DIRECTION. PIPING ROUTED BELOW GRADE BEAMS SHALL BE SLEEVED (2 PIPE SIZES LARGER) FOR THE ENTIRE WIDTH OF THE GRADE BEAM ZONE OF INFLUENCE + 1'-0" MIN. ON EACH SIDE.
37. COORDINATE ENTERING AND LEAVING LOCATIONS AND INVERTS OF PLUMBING SERVICES WITH SITE UTILITIES PRIOR TO ANY SITE OR BLDG. SYSTEM INSTALLATIONS.

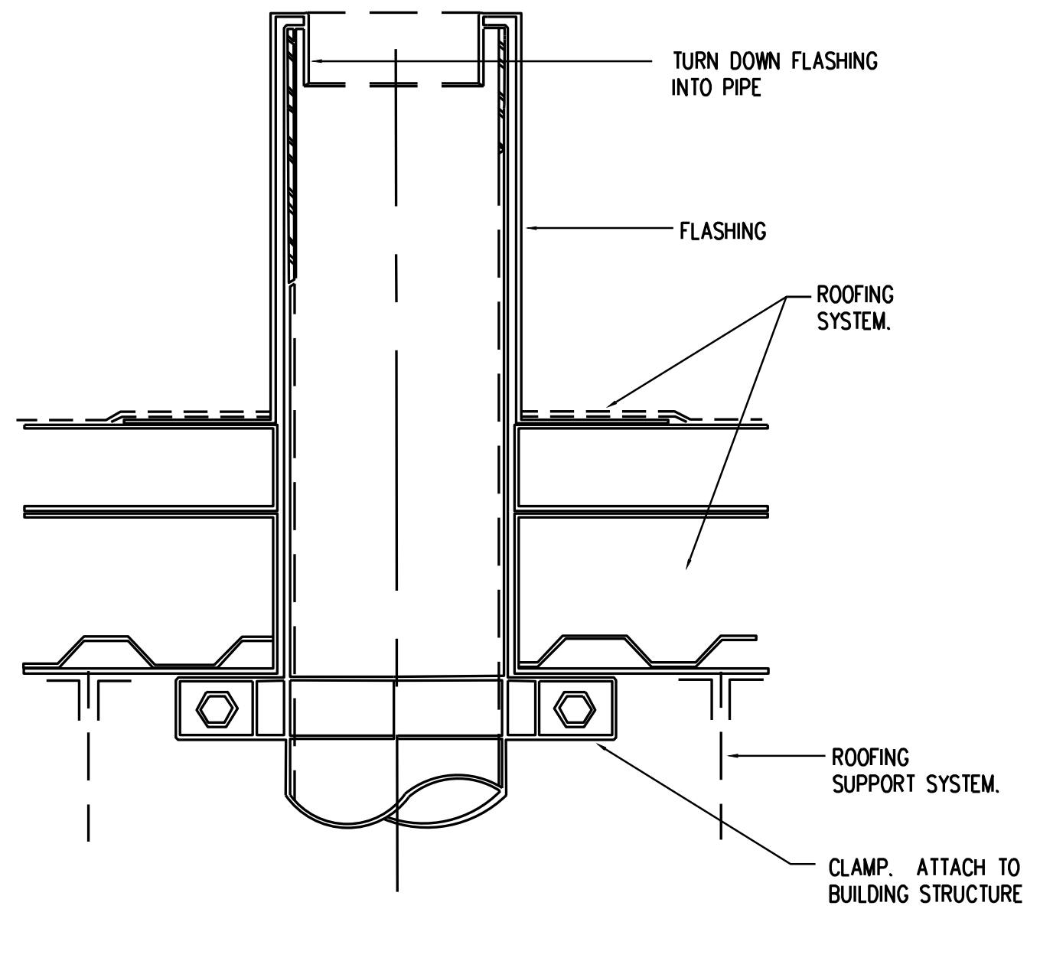

VENT THRU ROOF DETAIL

NTS

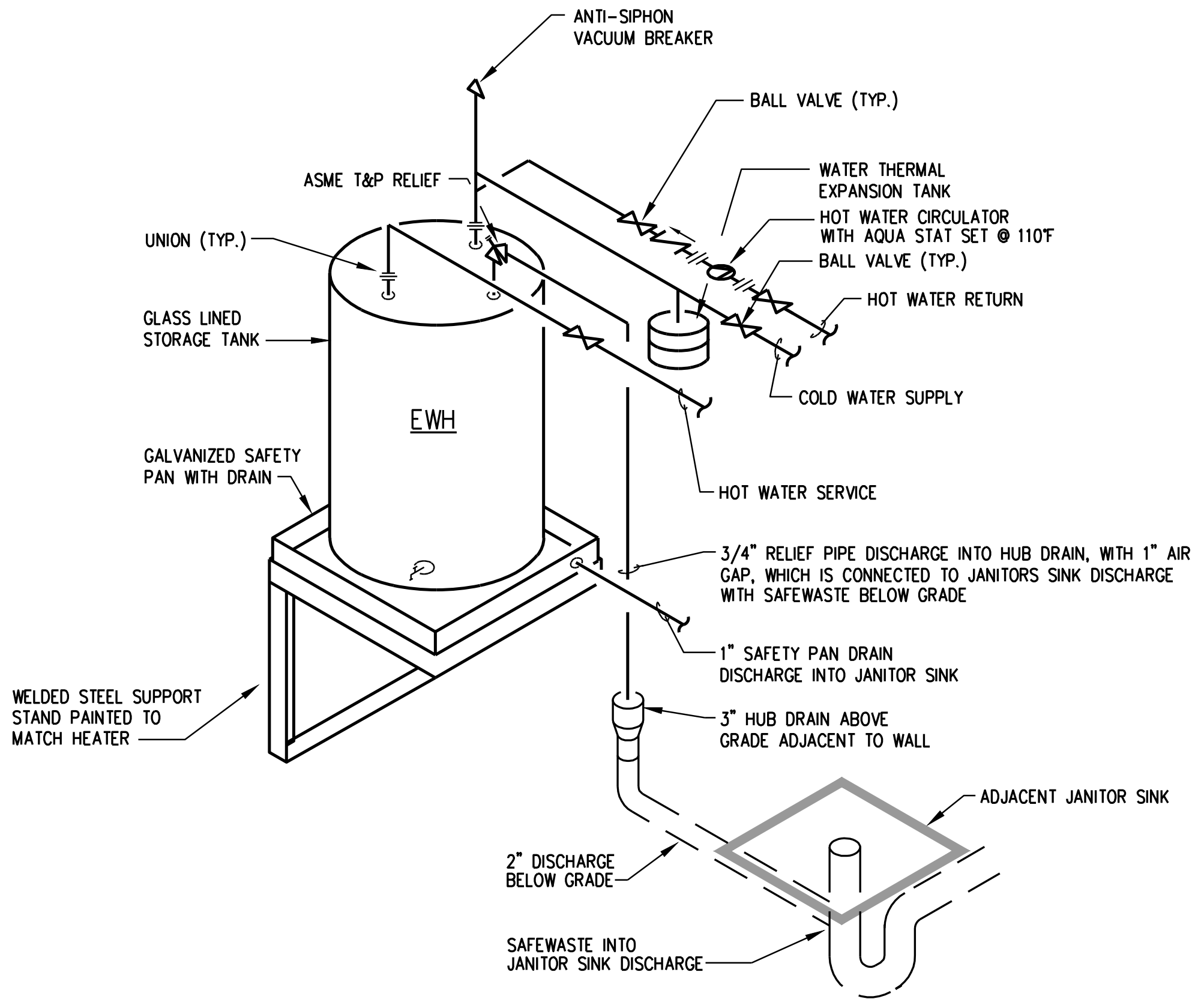

WATER HEATER DETAIL

NOT TO SCALE

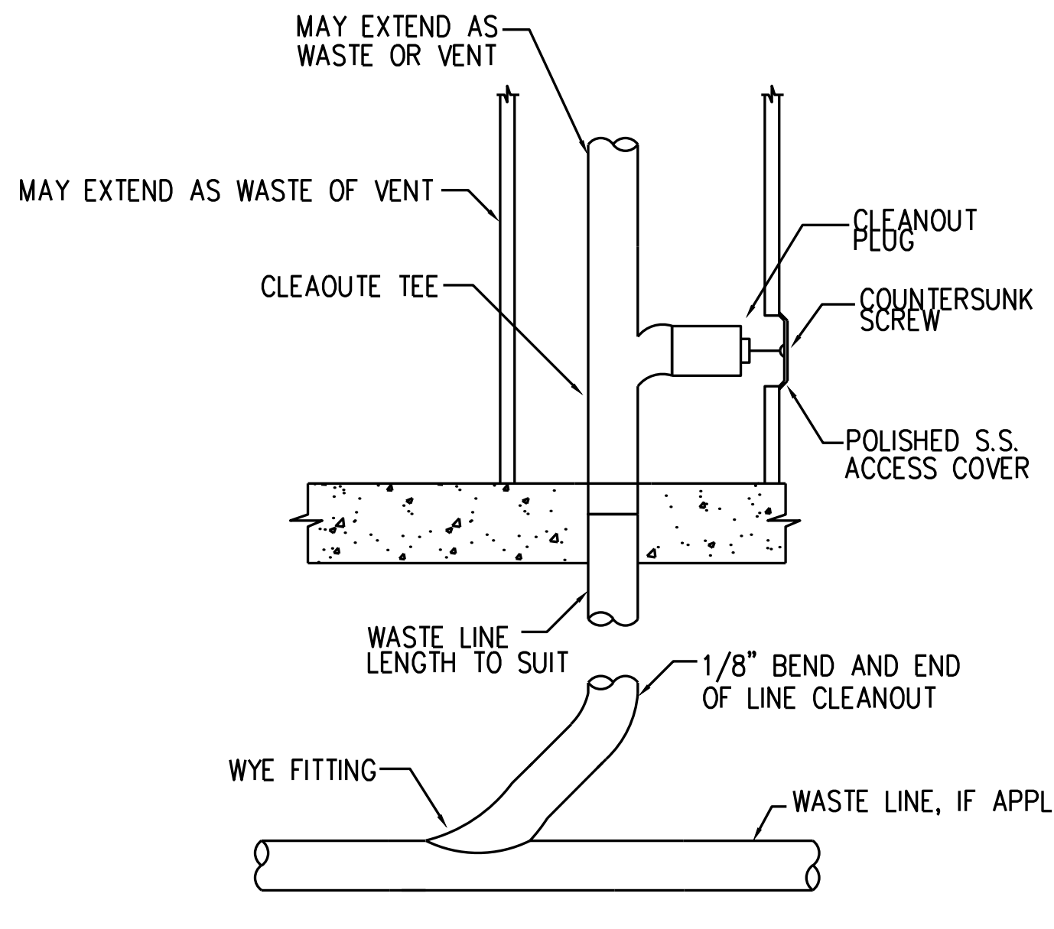

WALL CLEANOUT DETAIL

NOT TO SCALE

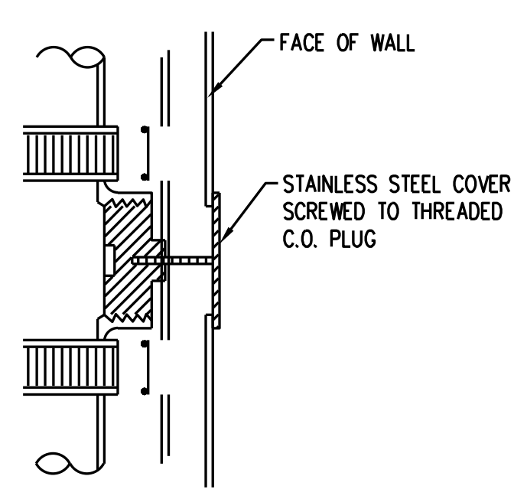

TYPICAL WALL CLEANOUT DETAIL

1 GENERAL NOTES, SCHEDULES AND DETAILS- PLUMBING
NTS

OCI ASSOCIATES, INC
Orlando. Fort Pierce. Fort Myers. West Palm Beach. Tampa.
Washington DC. Miami. Dallas. San Francisco. Norfolk.

9728 Commerce Center Court, Ft. Myers, FL 33908 | p. 239-454-5117

www.ociassociates.com

HARVARD • JOLLY
ARCHITECTURE
1639 Hendry Street, Fort Myers, FL 33901 | 727-896-4611 | www.HarvardJolly.com | AAC000119

ESTERO ON THE RIVER
RESTROOM FACILITY
ESTERO ,FLORIDA
CONSTRUCTION DOCUMENTS

Comm. No: 22031.01
Date: 12/09/22
Drawn: EPH

Revisions		
No.	Date	Note

TO THE BEST OF MY KNOWLEDGE, THE PLANS AND SPECIFICATIONS COMPLY WITH THE MINIMUM BUILDING CODES.

JASON L. SMITH, P.E.
600 S. ORLANDO AVE.
MAITLAND, FL 32751
FL. REG. NO.: PE57743

GENERAL NOTES,
SCHEDULES AND
DETAILS-PLUMBING

P-001

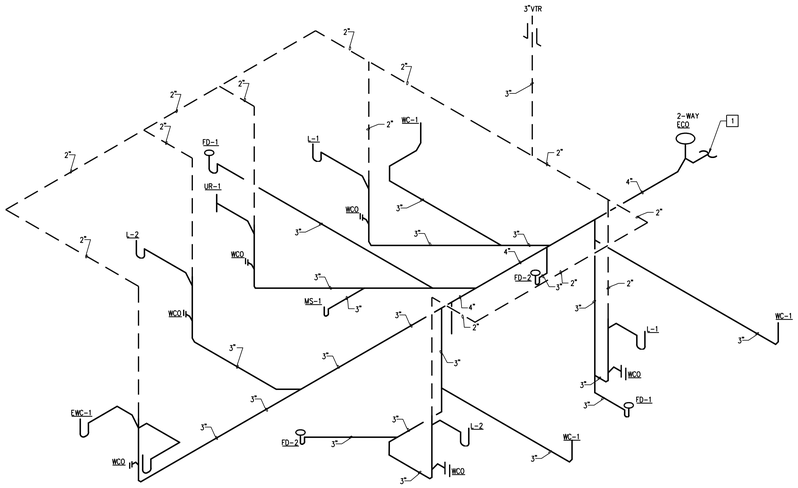

4 SANITARY ISOMECTRIC
SCALE: N.T.S.

SANITARY	TOTAL
DFU	20.5
APPROX INVERT	30" B.F.F.

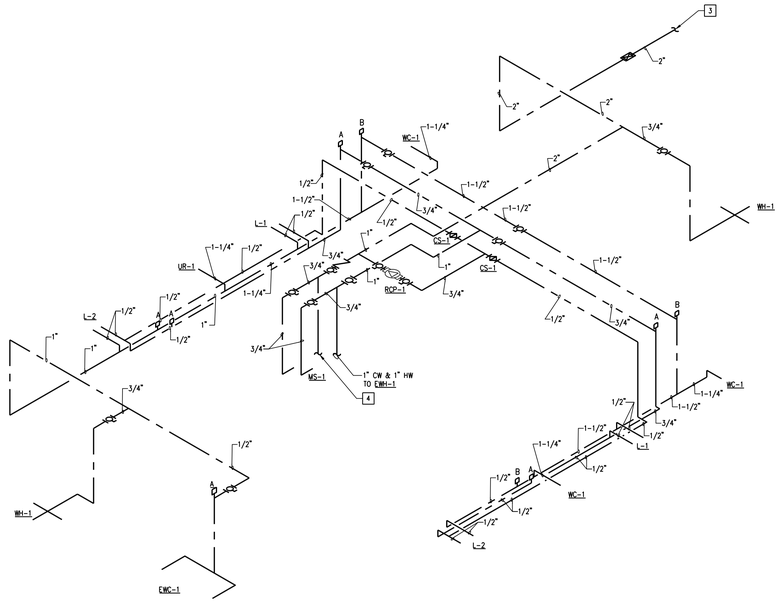

5 DOMESTIC WATER ISOMECTRIC
SCALE: N.T.S.

	WSFU	GPM
CW	45.5	48.0
HW	9.0	13.7

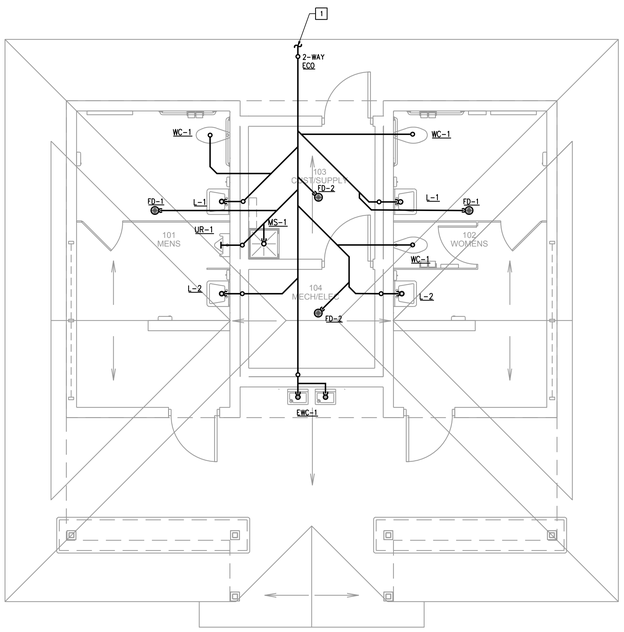

1 SANITARY FLOOR PLAN - PLUMBING
SCALE: 1/4" = 1'-0"

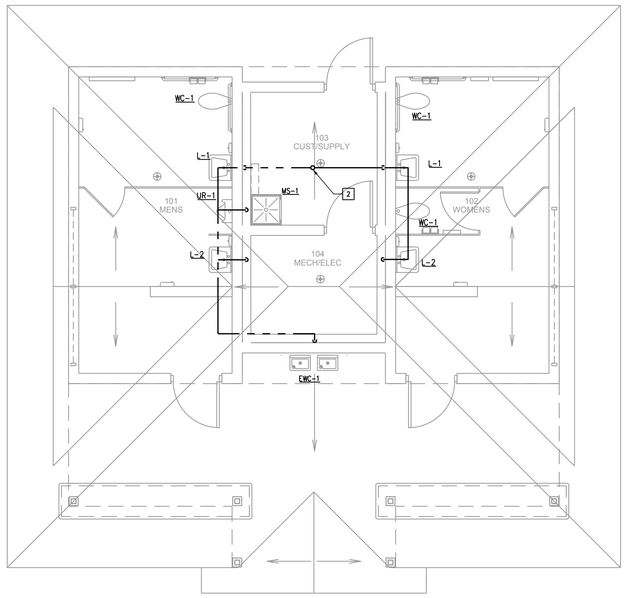

3 WASTE VENT FLOOR PLAN - PLUMBING
SCALE: 1/4" = 1'-0"

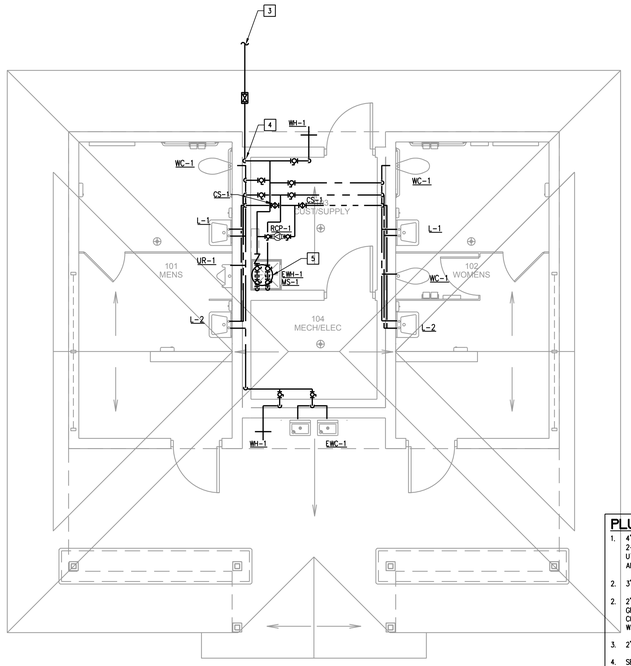

2 DOMESTIC FLOOR PLAN - PLUMBING
SCALE: 1/4" = 1'-0"

PLUMBING KEYNOTES 7:

1. 4" SANITARY WASTE PIPING BELOW GRADE WITH 2-WAY EXTERNAL CLEANOUT. REFER TO CIVIL UTILITY SITE PLAN FOR CONTINUATION. (20 DFU, APPROX. INVERT 30" BELOW FINISHED FLOOR).
2. 3" VENT THROUGH ROOF. (VTR)
2. 2" DOMESTIC WATER SERVICE PIPING BELOW GRADE WITH SHUT-OFF VALVE IN BOX. REFER TO CIVIL UTILITY SITE PLAN FOR CONTINUATION. 45.5 WATER FIXTURE UNITS= 48 GPM.
3. 2" CW UP FROM BELOW.
4. SEE EWH DETAIL ON P-001 SHEET.

OCI ASSOCIATES, INC
Orlando. Fort Pierce. Fort Myers. West Palm Beach. Tampa. Washington DC. Miami. Dallas. San Francisco. Norfolk.
9728 Commerce Center Court, Ft. Myers, FL 33908 | p. 239-454-5117
www.ociassociates.com

HARVARD • JOLLY ARCHITECTURE
1639 Hendry Street, Fort Myers, FL 33901 | 727-896-4611 | www.HarvardJolly.com | AAC000119

ESTERO ON THE RIVER RESTROOM FACILITY
ESTERO, FLORIDA
CONSTRUCTION DOCUMENTS

Comm. No: 22031.01
Date: 12/09/22
Drawn: EPH

Revisions

No.	Date	Note

TO THE BEST OF MY KNOWLEDGE, THE PLANS AND SPECIFICATIONS COMPLY WITH THE MINIMUM BUILDING CODES.

JASON L. SMITH, P.E.
600 S. ORLANDO AVE.
MAITLAND, FL 32751
FL REG. NO.: P037743

FLOOR PLANS & ISOMETRICS - PLUMBING

P-101