APPLICATION REQUEST FOR DESIGN REVIEW BOARD PUBLIC INFORMATIONAL MEETING IN THE VILLAGE OF ESTERO

[LDC Section 33-54]

REQUEST IS FOR: Public Informational Meeting pursuant to LDC Section 33-54 (a) & (b)

1. Applicant: ESTERO MEMORY CARE, LLC
2. Project Name: AUTUMN LEAVES
3. Address: 22900 LYDEN DR
4. Strap Number: _____
5. Application Number: _____

6. Type of Application (check appropriate type(s)):

- [x] Monument Sign
- [ ] Limited Review Development Order
- [ ] Architecture
- [ ] Development Order
- [ ] Landscaping & Buffers
- [ ] Other _____ (Specify)

7. Project Description. (Brief description of project and reason for application.)

Requesting approval for a change in the Project's monument signs. An unlighted sign permit was obtained, and an aluminum sign with vinyl lettering (no illumination) was installed.

This request is to obtain approval of two internally illuminated signs, with the same characteristics (lettering, fonts, logo and colors) as the approved signs that were installed (see attachments).

8. Application shall be accompanied by an electronic copy of the detail plans, illustrating the scope of the project including all four (4) sides of the building, easements, and landscape plans. The plans shall define what is being requested and the existing conditions. Pursuant to Ordinance 15-01, plans and specifications are to be prepared by a registered architect or registered engineer.

ESTERO MEMORY CARE, LLC

BY [signature]

Signature

STEVEN C. MEACHER, ASST SECY
THE LASALLE GROUP, INC MANAGING MEMBER

10/20/16.

Date

THE VILLAGE OF ESTERO
DEPARTMENT OF COMMUNITY DEVELOPMENT
9401 Corkscrew Palms Circle
Estero, Florida 33928
PHONE (239) 221-5036

THE LASALLE GROUP

October 31, 2016

415 S Florida Blanca Street
Pensacola, Fl 32502

Ms. Maryann Devanas,
Planning and Zoning Tech
Village of Estero
9401 Corkscrew Palms Circle
Estero, FL 33928

RE: P.I.M. Meeting Nov 9, 2016
Autumn Leaves of Estero
22900 Lyden Drive,

Dear Ms. Devanas:

Attached, please find our Application Request for approval of a change in the referenced project's monument signs. Although the monument structures were completed as approved, the prior sign permit was obtained using an aluminum sign with vinyl lettering (no illumination). The current request is to obtain approval of two internally illuminated signs, with the same overall sign size, lettering, fonts, logo and colors. This will be the same sign face, but with internal illumination as shown in the attachment. In addition, we have also resized the sign's height to match the previous approval.

We plan to attend the meeting.

Thank you for your assistance.

Estero Memory Care, LLC

By: Steven C. Meacher,
Senior Advisor/Assistant Secretary
The LaSalle Group, Inc., Managing Member.
Cell: 972.697.5316
smeacher@lasallegroup.com

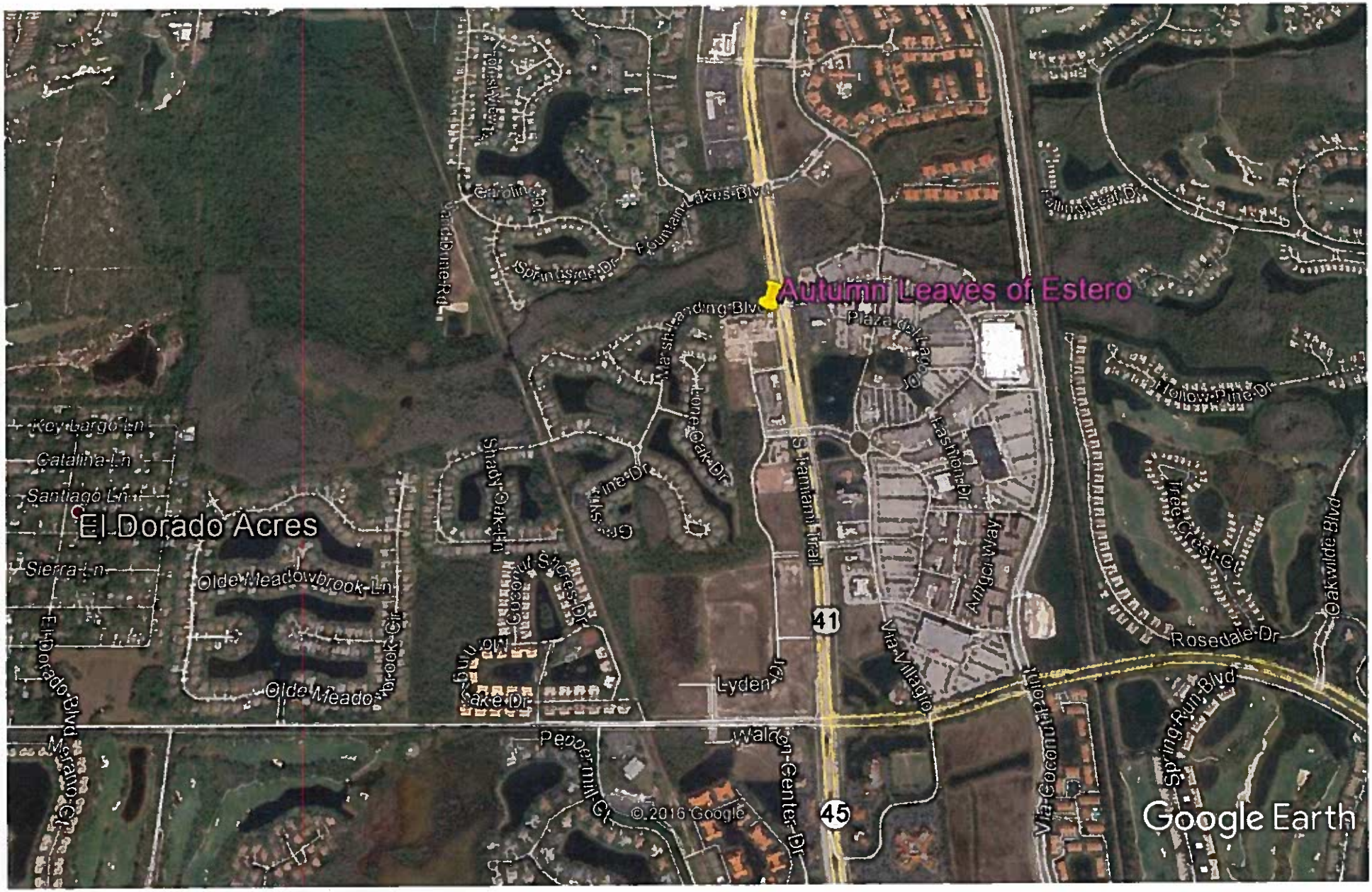

Google Earth

miles 1

km 1

LOCATION MAP.

Z:\JOBS\S\SYSTEMS 290\AUTUMN LEAVES\MAIN ID 2-2 SOUTH

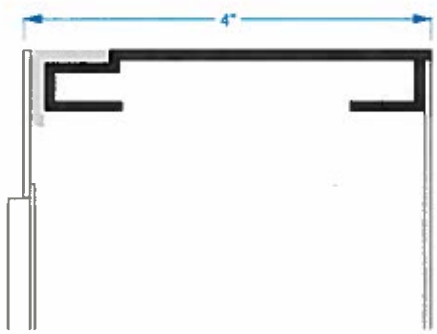

SPECIFICATIONS QTY. 2 SIGNS

EXISTING WALL.
4" DEEP EXTRUDED ALUMINUM CABINETS PTD. TO MATCH PMS 5185.
.090 ROUTED ALUMINUM FACE W/PUSHED THRU ACRYLIC LOGO & COPY.
INTERNAL ILLUMINATION BY WHITE LEDS.
LOGO & COPY TO BE COVERED W/DIGITAL PRINT TRANSLUCENT VINYL.
FONT TO BE CLEARVIEW ONE MEDIUM.
ELECTRICAL OUTLET LOCATION TO BE CTR. BACK.

- PMS 5185C
- PMS 158C
- PMS 108C
- PMS 2573C
- PMS 138C
- P&L 5-31 SOAPSTONE

Project: 290 Sign Systems

Date: 3.31.16

Approval:
Name
Date

Sign Offs:
Graphics
Production
Purchasing
Quality
Load Out

Notes:

Electrical Components

	Qty.	Item #	Volts	Amps
Lamp				
LED'S				
Power Supply				
Ballast				
Toggle Switch				
Misc				

Manufactured by
UNIVERSAL SIGN SYSTEMS
9801 Falcon View St, Grand Rapids MI 49513
www.universalsignsystems.com
Ph 616.554.9999 Fx 616.554.9922

REQUEST: FOR PROPOSED INTERNALLY LIGHTED SIGN FACES

GENERAL NOTES:

MATERIAL SPECIFICATIONS (COORDINATION):

MONUMENT SIGN

THE CONTRACTOR MUST COORDINATE THE SPECIFIED LOCATION OF THESE STRUCTURES TO BE CONSISTENT WITH THE DESIGN LAYOUT. THE CONTRACTOR MUST VERIFY THAT THE STRUCTURES LOCATION ARE CONSISTENT WITH THESE DRAWING PRIOR TO PROCEEDING WITH THE WORK. CONTACT THE OWNER IMMEDIATELY IF ANY DISCREPANCIES EXISTING WITH THE INSTALLATION OF THE SIGN MONUMENT AND THESE DRAWINGS.

CONSTRUCTION NOTES:

1. PRIOR TO THE EXECUTION OF ANY WORK ON-SITE, THE CONTRACTOR WILL VERIFY THE LOCATION OF ALL UTILITIES (UNDERGROUND & OVERHEAD) ANY DISRUPTION OR DAMAGE TO ANY UTILITIES OR SERVICES BY CAUSE OF THE CONTRACTOR SHALL BE THE CONTRACTORS RESPONSIBILITY TO REMEDY TO THE SATISFACTION OF THE PROPERTY OWNER.
2. THE CONTRACTOR WILL BE RESPONSIBLE FOR COORDINATING ALL WORK AND WORK RELATED ACTIVITIES WITH OTHER TRADES CONDUCTING WORK ON-SITE. ANY CONFLICTS BETWEEN TRADES MUST BE CORRECTED PRIOR TO EXECUTION ANY WORK THAT MAY NOT BE IN COMPLIANCE WITH THESE DOCUMENTS OR WITH THE EXPECTED RESULTS.
3. ANY PERMITS REQUIRED FOR THE WORK HEREIN DELINEATED MUST BE SUBMITTED FOR AND ACQUIRED BY THE CONTRACTOR PRIOR TO THE COMMENCEMENT OF ANY WORK HEREIN DEPICTED.
4. CONTRACTOR WILL BE RESPONSIBLE FOR COORDINATING ALL FINAL MATERIAL SELECTION WITH THE OWNERS REPRESENTATIVE PRIOR TO ORDERING OR REQUIRING DELIVERY OF MATERIALS ON-SITE. THE CONTRACTOR SHALL NOTE THAT THE MATERIAL SPECIFICATIONS DEPICTED IN THESE DOCUMENTS ARE SUBJECT TO CHANGE AND MUST BE VERIFIED BY THE OWNER.

DRAINAGE NOTES:

1. PRIOR TO THE COMMENCEMENT OF ANY WORK, THE CONTRACTOR SHALL VERIFY THE PHYSICAL LOCATION OF ALL EXISTING ELEMENTS WITHIN THE LIMITS OF WORK AND MUST VERIFY THE EXISTING GRADE ELEVATIONS TO DETERMINE THAT ALL SLOPES SHALL PROVIDE POSITIVE DRAINAGE AWAY FROM ANY STRUCTURES IN CONJUNCTION WITH THE ANY DRAINAGE SYSTEM IF APPLICABLE.
2. ALL GRADES IF APPLICABLE MUST BE DETERMINED BY THE PROJECT SURVEYOR PRIOR TO THE COMMENCEMENT OF ANY LAYOUT WORK OR MATERIAL INSTALLATIONS. ALL GRADES MUST BE VERIFIED AND SET IN ACCORDANCE WITH THE ARTIST AND ILLUSTRATION OF THE LAYOUT.
3. ALL GRADES IF APPLICABLE MUST BE FIELD VERIFIED BY A LICENSED SURVEYOR.

DIMENSIONING NOTES:

1. PRIOR TO THE COMMENCEMENT OF ANY WORK, THE CONTRACTOR SHALL VERIFY THE PHYSICAL LOCATION OF ALL EXISTING ELEMENTS WITHIN THE LIMITS OF WORK AND MUST VERIFY THE EXISTING GRADE ELEVATIONS TO DETERMINE THAT ALL SLOPES SHALL PROVIDE POSITIVE DRAINAGE AWAY FROM STRUCTURES IN CONJUNCTION WITH ANY PROPOSED DRAINAGE SYSTEM IF APPLICABLE.
2. ALL DIMENSIONS TO BE DETERMINED BY THE PROJECT SURVEYOR PRIOR TO THE COMMENCEMENT OF ANY LAYOUT WORK OR MATERIAL INSTALLATIONS. ALL DIMENSIONS MUST BE VERIFIED AND SET IN ACCORDANCE WITH THE ARTIST AND ILLUSTRATION OF THE LAYOUT.
3. THE CONTRACTOR MUST ESTABLISH THE PROPERTY LINES DELINEATED ON THE DRAWINGS PRIOR TO ANY ACTUAL LAYOUT WORK AND MUST VERIFY THESE PROPERTY LINES WITH THERE REFERENCES.
4. ALL ANGLES ARE 90 DEGREES UNLESS OTHERWISE NOTED.
5. ALL DIMENSION TOLERANCES ARE TO THE NEAREST INCH.

LOCATION MAP:

LEGEND:

SHEET REFERENCES:

SHEET LH-1
DECORATIVE WALL LAYOUT AND CONSTRUCTION NOTES

SHEET LH-2
DECORATIVE WALL CONSTRUCTION DIMENSIONS & MATERIAL SPECIFICATIONS

SHEET LH-3
DECORATIVE WALL CONSTRUCTION DIMENSIONS & STRUCTURAL NOTES

SHEET LH-4
DECORATIVE FLAG POLES

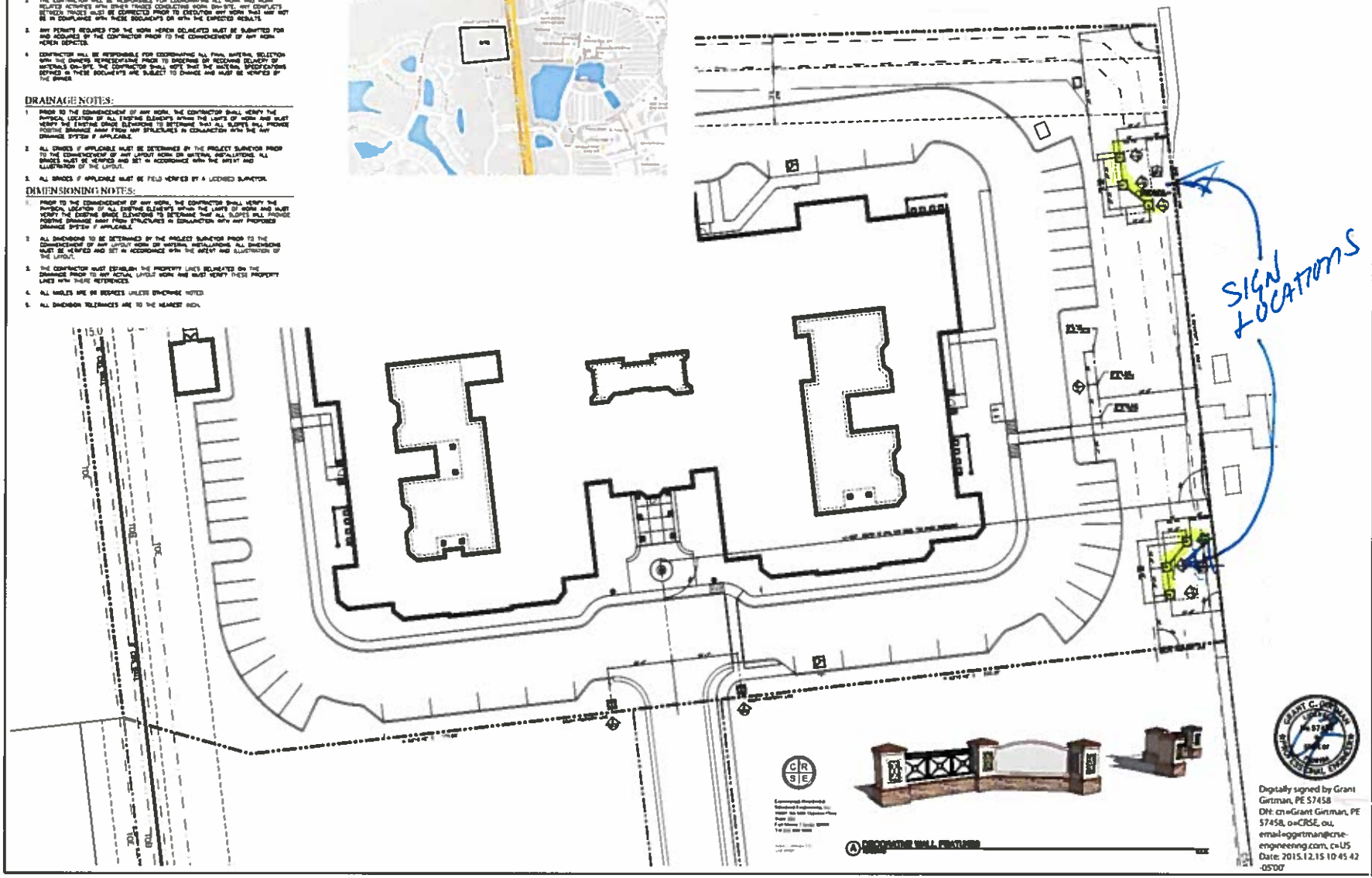

Digitally signed by Grant Girtman, PE 57458
DN: cn=Grant Girtman, PE 57458, o=CRSE, ou, email=ggirtman@crse-engineering.com, c=US
Date: 2015.12.15 10:45:42 -05'00'

LAND ARCHITECTS INC.

8300 HONEYCREEK DRIVE
FORT MYERS, FLORIDA 33907
PHONE: 239.334.9144

AUTUMN LEAVES OF ESTERO

AN ADULT LIVING FACILITY

ESTERO, FLORIDA

PREPARED FOR:
THE LASALLE GROUP
10751 WESTWOOD PARKWAY, SUITE 200
DULUTH, GEORGIA 30096

Sheet Title: HARDSCAPE LAYOUT

Land Architects, Inc.

SCALE: 1" = 20'-0"

Notice of Copyright:

Sheet No.:
LH-1
SHEET OF

AUTUMN LEAVES COMMERCIAL SIGNAGE

SAMPLES OF PREVIOUS ILLUSTRATIONS

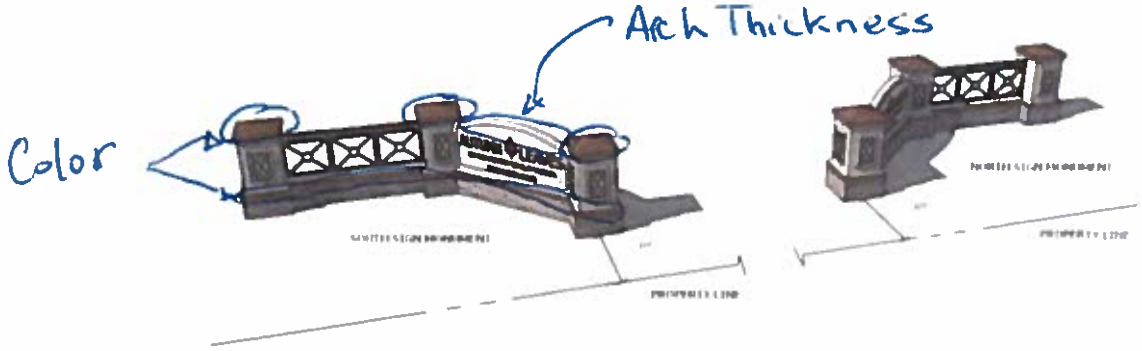

PHOTOS OF CURRENT SIGNAGE COLORS & BUILDING

As Built - Colors.

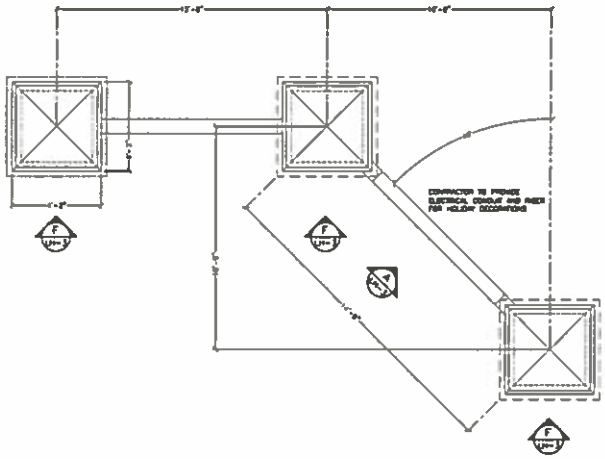

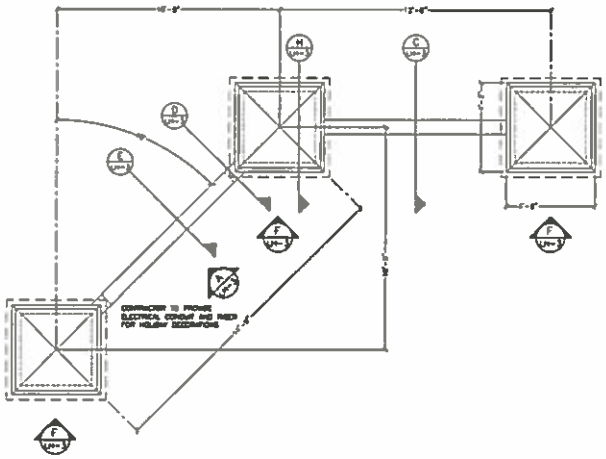

(A) DECORATIVE WALL PLAN — 3/8" = 1'-0"

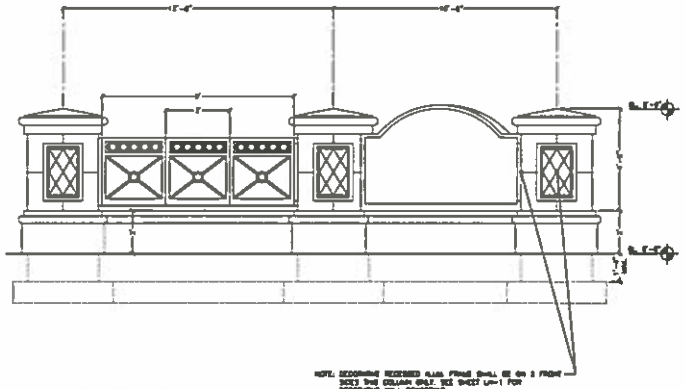

NOTE: DECORATIVE RECESSED ALUM. FRAME SHALL BE ON 3 FRONT SIDES THE COLUMN ONLY. SEE SHEET LH-1 FOR DECORATIVE WALL RENDERING

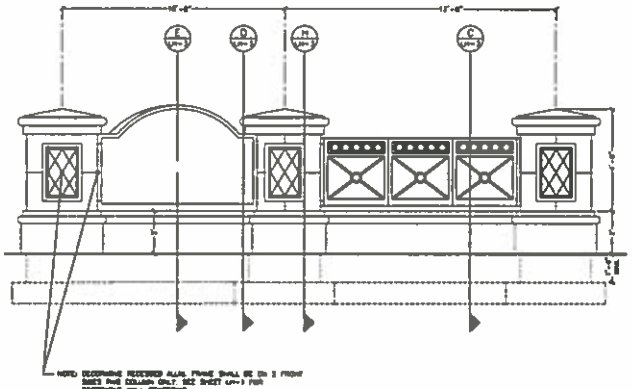

NOTE: DECORATIVE RECESSED ALUM. FRAME SHALL BE ON 3 FRONT SIDES THE COLUMN ONLY. SEE SHEET LH-1 FOR DECORATIVE WALL RENDERING

(B) DECORATIVE WALL ELEVATION — 3/8" = 1'-0"

HARDSCAPE MATERIAL:

1 MATERIAL SPECS. (PRECAST COLUMN CAP):

PRECAST COLUMN CAP
- QUANTITY: TBD
- TYPE: "LIGHT" TEXTURE (CONTRACTOR TO SUPPLY SAMPLE FOR REVIEW AND APPROVAL)
- COLOR: MATCH BUILDING STUCCO MATTERNS #1-63148 (OR OWNER APPROVED COLOR)
- NOTES: (EAST STONE OR OWNER APPROVED EQUAL) ALL SPECIFICATIONS FOR ARCHITECTURAL CAST STONE SHALL MEET OR EXCEED THE "CAST STONE INSTITUTES" MFA TECHNICAL SPECIFICATIONS.
- SUPPLIER: (CONTRACTOR)

2 MATERIAL SPECS. (STUCCO FRAME & TOP BAND):

TOP TRIM
- QUANTITY: TBD
- TYPE: "LIGHT" TEXTURE (CONTRACTOR TO SUPPLY SAMPLE FOR REVIEW AND APPROVAL)
- COLORS: BUILDING ACCENT/TRIM OATMEAL #1-81 (OR OWNER APPROVED COLOR)
- NOTES: (EAST STONE OR OWNER APPROVED EQUAL) ALL SPECIFICATIONS FOR ARCHITECTURAL CAST STONE SHALL MEET OR EXCEED THE "CAST STONE INSTITUTES" MFA TECHNICAL SPECIFICATIONS.
- SUPPLIER: (CONTRACTOR)

3 MATERIAL SPECS. (COLUMN BODY):

BASE TRIM
- QUANTITY: CONTRACTOR TO VERIFY QUANTITY
- TYPE: STUCCO "SAND FINISH"
- COLOR: MATCH BUILDING ACCENT/TRIM OATMEAL #1-81 (CONTRACTOR TO PROVIDE SAMPLE FOR REVIEW AND APPROVAL)
- NOTES: FINISH TO BE APPLIED TO COLUMN BODY
- SUPPLIER: (CONTRACTOR)

4 MATERIAL SPECS. (COLUMN BASE TRIM):

BASE TRIM
- QUANTITY: TBD
- TYPE: "LIGHT" TEXTURE (CONTRACTOR TO SUPPLY SAMPLE FOR REVIEW AND APPROVAL)
- COLORS: (A) MATCH BUILDING ACCENT/TRIM OATMEAL #1-81(OR OWNER APPROVED COLOR) (B) MATCH BUILDING BASE MATTERNS #1-63148(OR OWNER APPROVED COLOR)
- NOTES: (EAST STONE OR OWNER APPROVED EQUAL) ALL SPECIFICATIONS FOR ARCHITECTURAL CAST STONE SHALL MEET OR EXCEED THE "CAST STONE INSTITUTES" MFA TECHNICAL SPECIFICATIONS.
- SUPPLIER: (CONTRACTOR)

5 MATERIAL SPECS. (COLUMN BASE STONE):

BASE STONE
- QUANTITY: TBD
- TYPE: EXTERIOR BUILDING STONE (CONTRACTOR TO SUPPLY SAMPLE FOR REVIEW AND APPROVAL)
- COLORS: SAN CARLOS BLEND RUSLAN CHOP (LEDERES)
- NOTES: GROUT COLOR #127 ANTIQUE LINEN
- SUPPLIER: MPLAND EMPLAZADO RANCH GREENERY INC. 4309 ANGLE HUSTON, TEXAS 77063 (713)-983-9874

6 MATERIAL SPECS. (DECORATIVE & LOGO):

(A) DECORATIVE ALUMINUM FRAME
- QUANTITY: CONTRACTOR TO VERIFY QUANTITY
- COLOR: BODY/CROSS MEMBERS SHALL BE PAINTED SHERWIN-WILLIAMS SW 6861
- SUPPLIER: CONTRACTOR TO SUPPLY ALL NECESSARY MOUNTING HARDWARE/CONNECTIONS
- SPECIFICATIONS: SEE SHEET LH-3 AND LH-3 FOR SIZE AND LOCATIONS.

(B) COMPANY LOGO
- QUANTITY: CONTRACTOR TO VERIFY QUANTITY
- COLOR: LOGO OUTLINE AND INTERIOR COLORS PER OWNERS APPROVED DIRECTOR
- SUPPLIER: CONTRACTOR TO SUPPLY ALL NECESSARY MOUNTING HARDWARE/CONNECTIONS
- SPECIFICATIONS: SEE SHEET LH-3 FOR SIZE

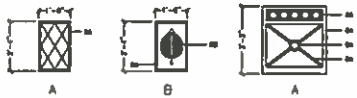

7 MATERIAL SPECS. (DECORATIVE WALL):

(A) IDENTIFICATION: (DECORATIVE WALL)
- QUANTITY: 3 DECORATIVE WALLS
- WALL: SMOOTH FACE SMOOTH STUCCO FINISH
- COLOR: MATCH BUILDING ACCENT/TRIM OATMEAL #1-81 (OR OWNER APPROVED COLOR)
- SUPPLIER: (CONTRACTOR)

(B) CAST STONE: (DECORATIVE BANDING)
- QUANTITY: TBD
- TYPE: (EAST STONE OR OWNER APPROVED EQUAL) ALL SPECIFICATIONS FOR ARCHITECTURAL CAST STONE SHALL MEET OR EXCEED THE "CAST STONE INSTITUTES" MFA TECHNICAL SPECIFICATIONS.
- COLOR: N/A
- SUPPLIER: (CONTRACTOR)

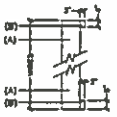

SEE E LH-3

Commercial-Residential Structural Engineering, Inc.
10801 Six Mile Cypress Pkwy
Suite 203
Fort Myers, Florida 33966
Tel 239 528 1966

Grant C. Grimm, PE
C-42 5658

Digitally signed by Grant Gartman, PE 57458
DN: cn=Grant Gartman, PE 57458, o=CRSE, ou, email=ggartman@crse-engineering.com, c=US
Date: 2015.12.15 10:46:17 -05'00'

LAND ARCHITECTS
4300 BARKLEY CREEK DRIVE
FORT MYERS, FLORIDA 33907
PHONE: 239.334.0144
WEB: www.LAFLA.com
EMAIL: info@LAFLA.com

AUTUMN LEAVES OF ESTERO
AN ADULT LIVING FACILITY
ESTERO, FLORIDA

PREPARED FOR:
THE LASALLE GROUP
3015 TRUSTWARD PARKWAY SUITE 302
DALLUTH, GEORGIA 30096

Sheet Title: HARDSCAPE DETAILS

Land Architects, Inc.

Notice of Copyright:

Sheet No.: LH-2

Details

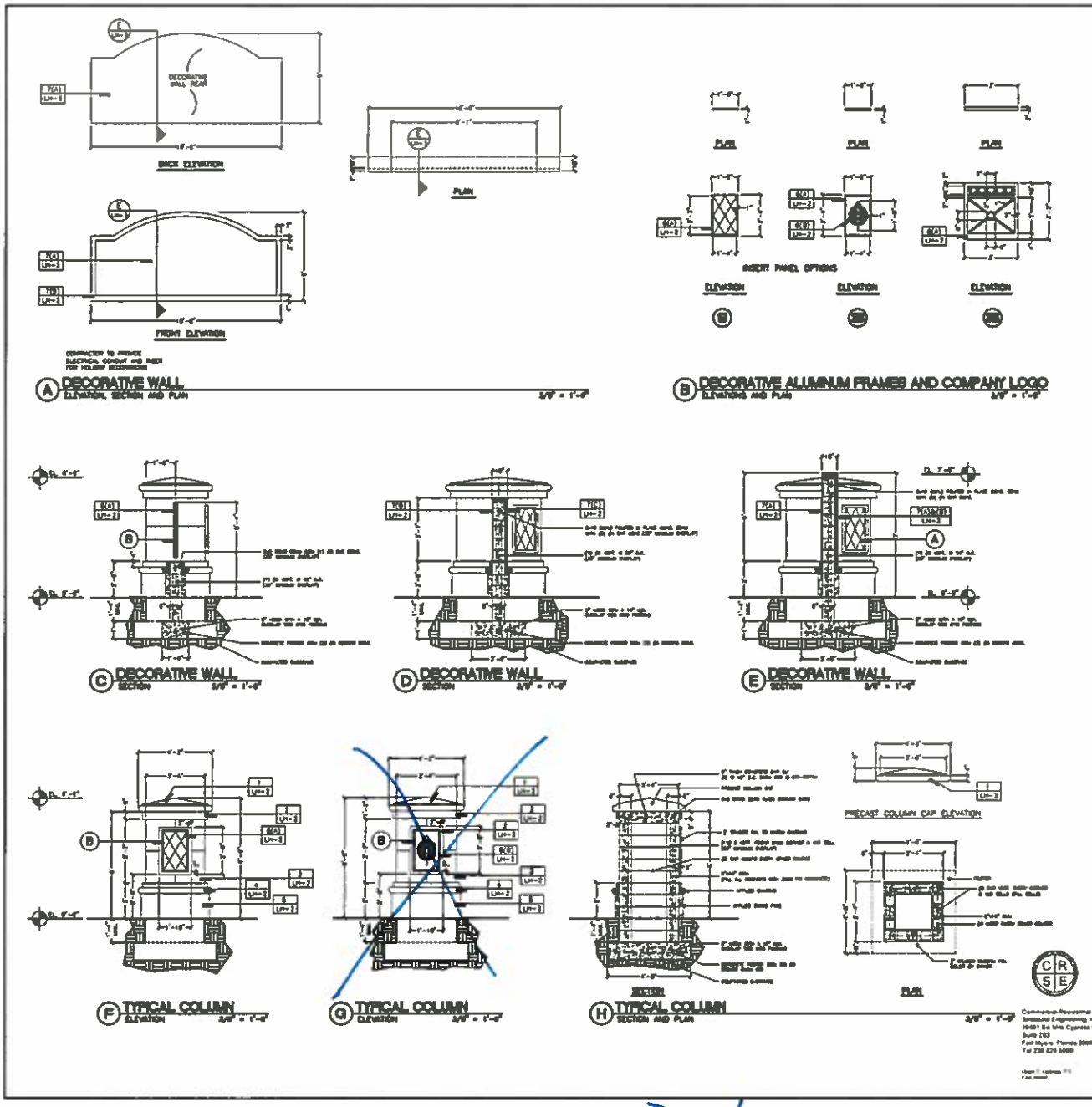

HARDSCAPE NOTES:

CONCRETE MASONARY UNITS (CMU) or CONCRETE BLOCK STRUCTURES (CBS):

All CMU and CBS to be ASTM-C-90-90. ASTM Grades N or NL. Provide Grters as necessary and/or as detailed.

MORTAR:

Type 'M' per ASTM-C-270-89 (Cement & Lime).

REINFORCING STEEL

All Reinforcing Steel work shall conform to ACI 530.1-92/ ASCE 5-92 Specifications for Masonry Structures (f'm=1500PSI) — including:

- ASTM A615-90 per Reinforcing Section (Grade 60);
- When a Foundation Dowel does not line up with a Vertical Core, it shall not be Skewed more than One Horizontal in Six Vertical Adjacent, even if it is in an adjacent Cell to the vertical that Reinforcing;
- Vertical Reinforcing Steel shall have a minimum clearance of one-quarter inch (1/4") from masonry;
- All vertical Reinforcement not shown on the drawings shall conform to the noted standards;
- Vertical Reinforcing each side of any opening, if required, shall be continuous to the Tie Beam or Lintel. Precast Lintels shall have opening to allow Reinforcing bars to continue uninterrupted;
- All Bar Lap Splices shall be 48 Bar Diameter minimum.

MASONARY WALL (CBS) NOTES:

All CBS Wall Structures and earth shall require Field inspections as required by Local Code.

GENERAL RETAINING WALL, PLANTERS, AND/OR COLUMNS NOTES

All walls, Planters, and/or Columns shown are 'Weight Bearing' Retaining Grade Structures and shall receive semi-mastic (or similar) Waterproofing Membrane on the inside Grade Retaining Portions of the Applicable Wall, Planters and/or Columns. On all Wall, Planters and/or Columns Dur-O-Wall will be applied to every other course. The Contractor, where applicable, shall allow for sufficient and proper reinforcements (including concrete footer sizings) to be included within the wall and column structures to contain the weight of the proposed grading indicated on the plans (connected horizon).

CONCRETE FOUNDATION NOTES:

All concrete shall conform to ACI 301 and shall have, at a minimum, 3000 PSI compressive strength in 28 days with a maximum slump of five inches (5").

CONCRETE FOOTINGS NOTE:

All Concrete Footings expected are to be set at the same top of Footing Elevation, unless otherwise noted.

All Concrete Footings shall bear on soil prepared as follows:

- Compact bottom of excavation with medium duty vibratory device or roller;
- Check density of existing soil or fill soil to ensure Minimum Density of 95% of Standard Modified Proctor has been reached for a depth of not less than two feet (2') below compacted surface before adding footer fill;
- After footing ground reaches minimum density of 95%, fill shall be placed in six inch (6") lifts and compacted to achieve approved density before next lift is added;
- Verification of Test for Standard Modified Proctor ASTM D1557 shall be filed with building official and Project Construction Superintendent. Contractor shall be solely responsible for filing these documents to verify specification;
- Footings have been designed for 2500PSI soil bearing capacity. Contractor shall verify in writing, prior to the execution of any work and shall send verification with the Building Official and Construction Superintendent;
- Treat soil for termites as per local code for a distance of not less than four feet (4') from the perimeter of all footings and/or slab edges.

GENERAL MAIN ENTRY FEATURE LAYOUT & GEOMETRY NOTES:

These layout drawings and character elevation details are based upon the approved design program of the Owner. Any deviation to these drawings shall be in accordance with the approved Permit(s) and shall meet with both the Owner's and Landscape Architect's written approval.

All dimensions are shown are to the CMU/CBS shell point (as opposed to the Cap or Facia, as may be expected). Actual dimensions and geometry suggested by these drawings may be adjusted, on a separate drawing (As-Built), by the Surveyor, Engineer, or Certified General Contractor, in order to conform to either Local Code Ordinances and/or general engineering concerns, practices, and feasibilities not reflected in these drawings. Written dimensions given shall take precedence over and drawn dimensions. All angles shall be 135, 90, or 45 degrees unless otherwise noted on the drawings. Some dimensions shown as 'Verify' relate to tangents and/or approximate rounded numbers due to geometry and the actual dimension may be field adjusted to make them 'fit' accordingly.

The Owner reserves the right to make any minor modifications conforming to the conceptual nature of the structures expected. Such as: changes to paint color; tiles and stucco types, and/or material selection where applicable. If there are any discrepancies discovered from these drawings after Permit Application Submittal for Building Permit, the drawings shall be resubmitted to the applicable jurisdictional agency.

Proposed grades and/or Top of Wall (TOW) elevations shown on these drawings relate to an assumed existing grade of +0.00' (to be established based upon actual existing grade elevations determined by a surveyor in NGVD terms. Maximum slope of grades shall be no greater than 3:1, unless specifically otherwise noted hereon. For final grading and/or drainage, see the related Civil Engineering documents produced by others.

GENERAL DESIGN CRITERIA:

Soil Bearing:	2000 PSF AS PER TABLE FBC 1806.2
Masonry:	1500 PSI
Rebar:	60000 PSI
Concrete:	3000 PSI
Wind Velocity:	180 MPH (VULT) 118.2 MPH (VASD)
Risk Category:	2
Exposure:	C
Internal Pressure:	N/A
Wind Design Pressure	33.0 psf

Digitally signed by Grant Gartman, PE 57458
DN: cn=Grant Gartman, PE 57458, o=CRSE, ou, email=ggartman@crse-engineering.com, c=US
Date: 2015.12.15 10:46:17

COMPLIANCE STATEMENT

REQUIRED BUILDINGS STANDARDS PER THE FLORIDA BUILDING CODE:

These Drawings and Specifications have been prepared by and/or reviewed by a Florida Registered Engineer and have been designed in Compliance with the 5th edition 2014 Florida Building Code. See Chapter 35 of the Florida Building Code for the list of all referenced standards.

Details.

LAND ARCHITECTS

4208 BIGHEAD CREEK DRIVE
FORT MYERS, FLORIDA 33907
PHONE: 239.334.0144

AUTUMN LEAVES OF ESTERO
AN ADULT LIVING FACILITY
ESTERO, FLORIDA

PREPARED FOR:
THE LASALLE GROUP
6075 WESTWOOD PARKWAY, SUITE 210
DULUTH, GEORGIA 30096

Sheet Title: HARDSCAPE DETAILS

Land Architects, Inc.

Sheet No.:
LH-3

GENERAL NOTES:

MATERIAL SPECIFICATIONS (COORDINATION)

CONSTRUCTION NOTES

DRAINAGE NOTES

DIMENSIONING NOTES:

LOCATION MAP:

LEGEND:

SHEET REFERENCES

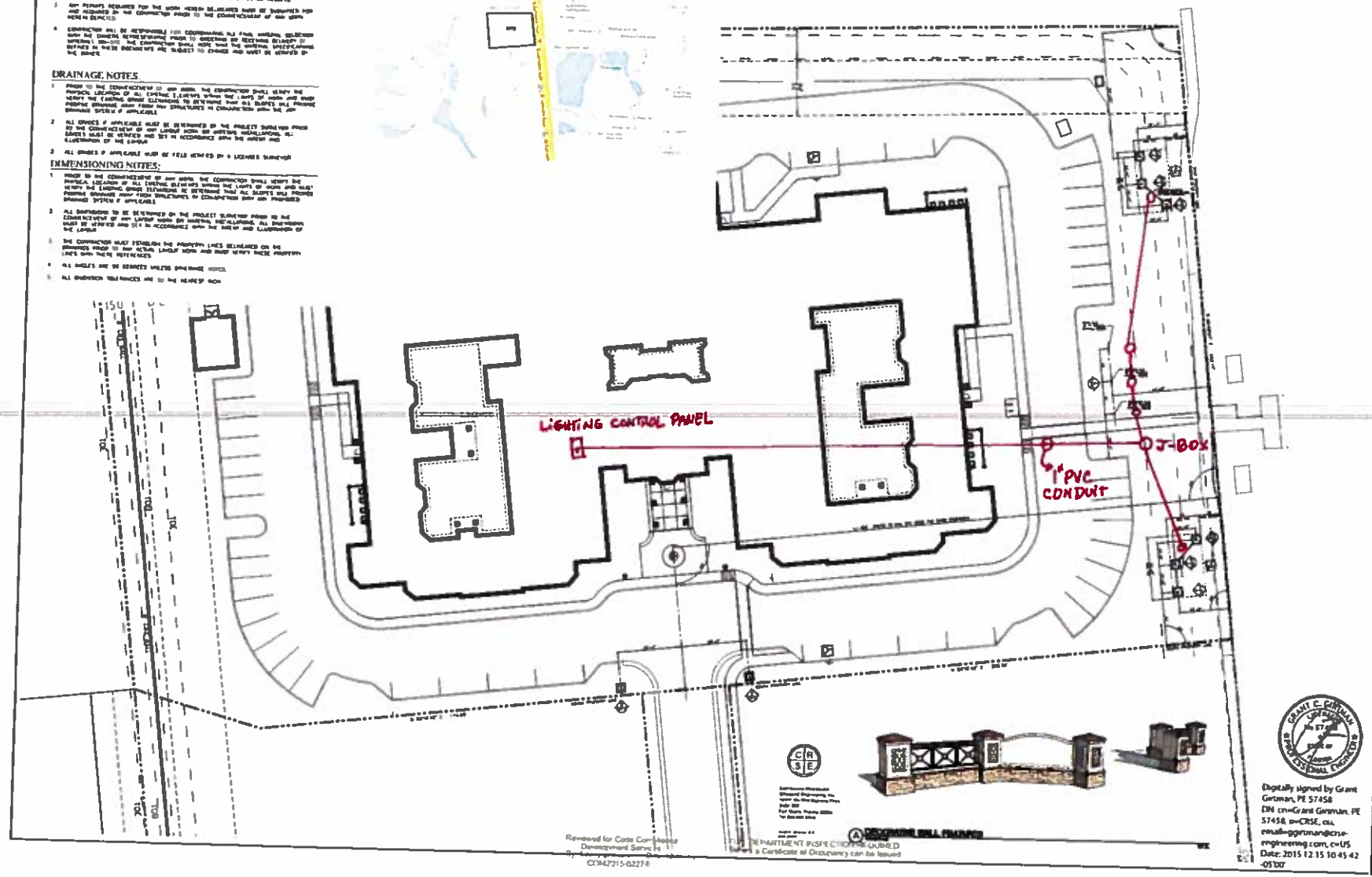

LAND ARCHITECTS INC

PHONE: 239.334.0144

AUTUMN LEAVES OF ESTERO
AN ADULT LIVING FACILITY
ESTERO, FLORIDA

PREPARED FOR:
THE LASALLE GROUP
3475 CRESTWOOD PARKWAY SUITE 222
DULUTH GEORGIA 30096

Sheet Title: LANDSCAPE LAYOUT

Land Architects, Inc.

Notice of Copyright

Sheet No.: LH-1

Reviewed for Code Compliance
Development Services
CO#2015-02278

Digitally signed by Grant Gerlman, PE 57458
DN: cn=Grant Gerlman, PE 57458, o=CRSE, ou, email=ggerlman@crse-engineering.com, c=US
Date: 2015.12.15 10:45:42 -05'00'

Electrical Connections

Previously Approved

Vinyl Over Aluminum Non-illuminated Sign

April 1, 2016

Village of Estero – Design Review Board
C/O Mary Gibbs, Director of Community Development
9401 Corkscrew Palms Circle
Estero, FL 33928

RE: **Autumn Leaves**

Dear Mary:

Per our recent conversations, please find attached information pertaining to changes to the proposed project sign. The proposed changes are primary colors and the actual sign face itself. All of the previous information and design elements proposed not associated with the sign face are consistent with the plans and drawings previously submitted. The proposed changes to the actual sign face are included in the attached PDF file.

Changes in colors are noted and have been made to remain consist with the final colors and materials chosen for the building. The previous colors proposed were more off white in nature as the colors executed are more ochre in nature. Both are consistent with the desired themes in Estero and the architecture of the project. The material color change in the applied stone is also more red-brown in nature versus the previous white-grayish theme. This change is also more consistent with the colors executed. Please see the attached photos against the previous graphics submitted.

Also attached is the proposed sign face design (as a separate PDF File). This is different from the previous design presented at the DRB meetings on the subject. The Applicant has opted to go with the sign company's design that executes these signs for their projects throughout the Country.

We hope that the Design Review Board will find this modifications to be both consistent with the design intent previously presented and current codes applicable.

Sincerely

LAND ARCHITECTS, INC.

William E. Prysi, RLA, ASLA
President / CEO

3D Animation
Virtual Design
Digital Imagery
Land Planning & Graphics
Landscape Architecture

6208 Whiskey Creek Drive
Fort Myers, Florida 33919
239.334.9144
www.LAIFLA.com
mail@LAIFLA.com

RLA 370

North & South Monument Walls

Z:\JOBS\SIS SYSTEMS 290\AUTUMN LEAVES MAIN ID 2-21

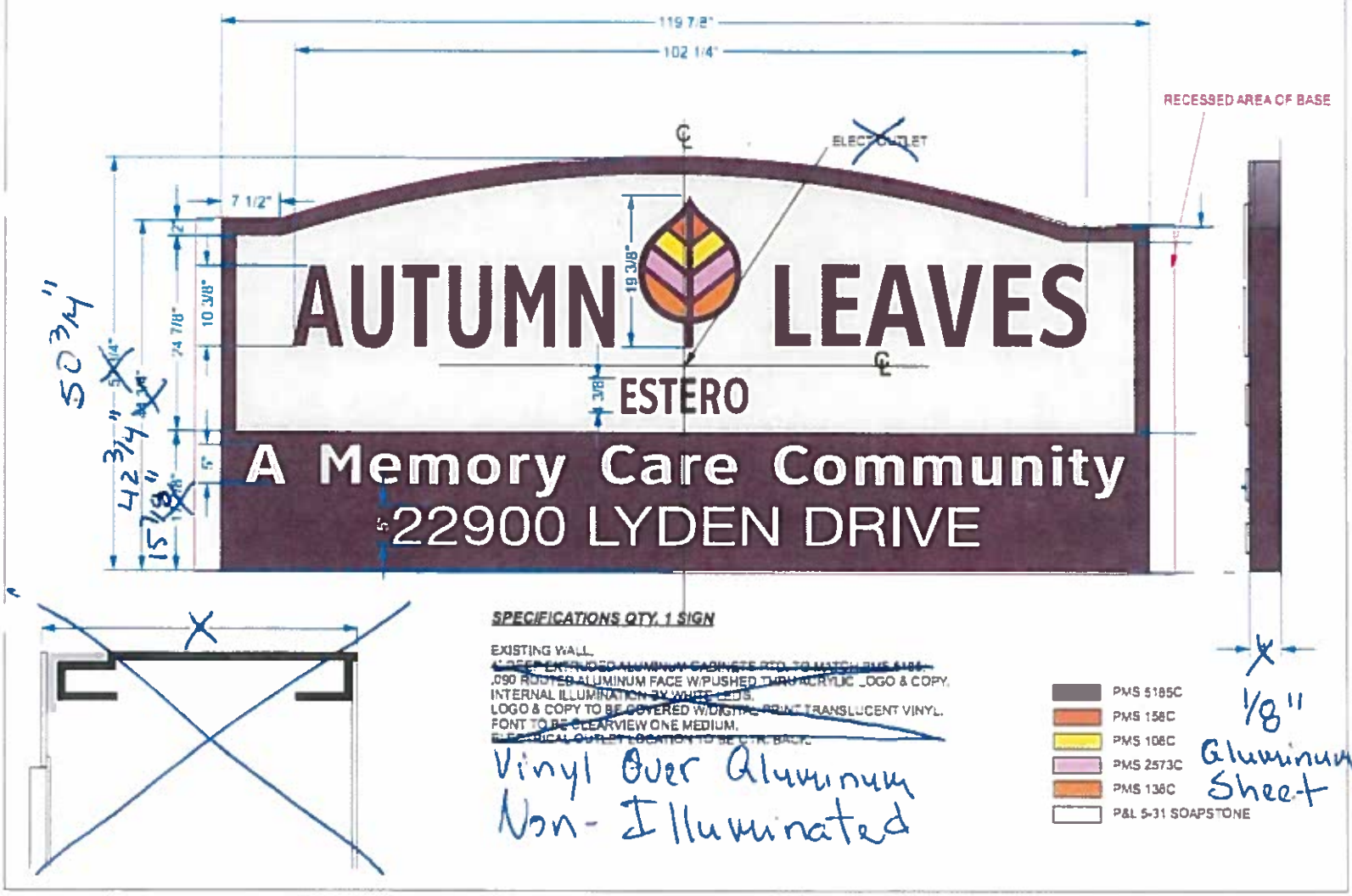

SPECIFICATIONS QTY. 1 SIGN

EXISTING WALL.
~~1/2" EXTRUDED ALUMINUM CABINETS RED, TO MATCH PMS 5185~~
.090 ROUTED ALUMINUM FACE W/PUSHED THRU ACRYLIC LOGO & COPY.
INTERNAL ILLUMINATION BY WHITE LEDS.
LOGO & COPY TO BE COVERED W/DIGITAL PRINT TRANSLUCENT VINYL.
FONT TO BE CLEARVIEW ONE MEDIUM.
~~ELECTRICAL OUTLET LOCATION TO BE ON BACK.~~

Vinyl Over Aluminum
Non-Illuminated

- PMS 5185C
- PMS 158C
- PMS 108C
- PMS 2573C
- PMS 136C
- P&L 5-31 SOAPSTONE

Project: 2/90 Sign Systems

Date: 3.31.16

Approval:

Sign Offs:
Graphics
Production
Purchasing
Quality
Load Out

Notes:

Electrical Components

	Qty	Item #	Volts	Amps
Lamp				
LED's				
Power Supply				
Ballast				
Toggle Switch				
Wire				

Manufactured by
UNIVERSAL SIGN SYSTEMS

APPROVED & INSTALLED SIGN FACE(S)
NORTH AND SOUTH LOCATIONS

INSTALLED. SIGN BASED ON THIS APPROVAL

North & South Monument Walls

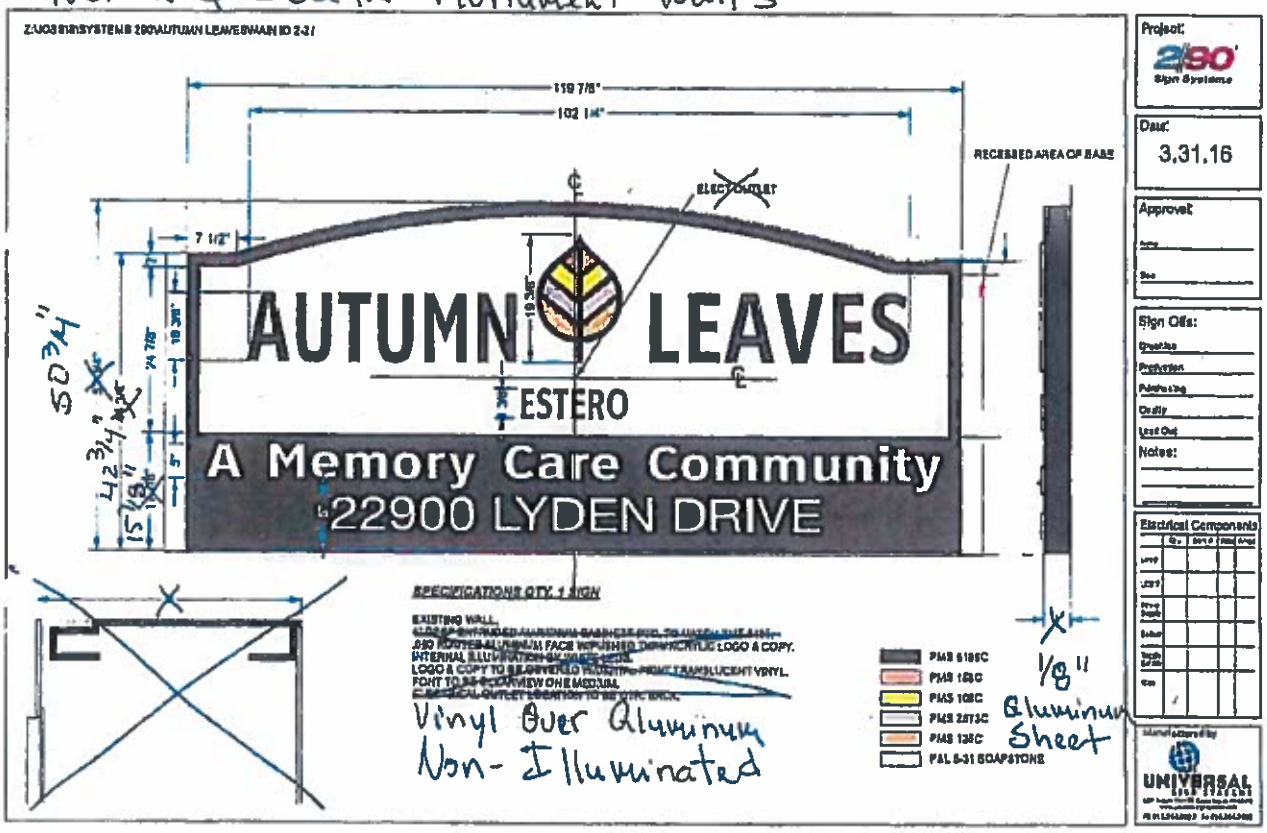

ZONING APPROVED
4.22.16 TM