APPLICATION REQUEST FOR DESIGN REVIEW BOARD WORKSHOP IN THE VILLAGE OF ESTERO

1. Applicant: CONIDARIS DEVELOPMENT COMPANY
2. Project Name: LAKES OF ESTERO PHASE II
3. Address: WILLIAMS RD, ESTERO FL 33928
4. Strap Number: 34-46-25-E3-1000E.0000
5. Application Number: DOS2009-00023

6. Type of Application (check appropriate type(s)):

- ☐ Monument Sign
- ☐ Limited Review Development Order
- ☐ Architecture
- ☐ Development Order
- ☐ Landscaping & Buffers
- ☒ Other: Development Order Extension

7. Project Description. (Brief description of project and reason for application.)

Extension of Lee County DOS2009-00023

8. Application shall be accompanied by an electronic copy of the detail plans, illustrating the scope of the project including all four (4) sides of the building, easements, and landscape plans. The plans shall define what is being requested and the existing conditions. Pursuant to Ordinance 15-01, plans and specifications are to be prepared by a registered architect or registered engineer.

Signature 8/30/2016 **Date**

THE VILLAGE OF ESTERO
DEPARTMENT OF COMMUNITY DEVELOPMENT
9401 Corkscrew Palms Circle
Estero, Florida 33928
PHONE (239) 221-5036

ESTERO DESIGN REVIEW COMMITTEE

April 27, 2009

RECEIVED
JAN 3 1 2013
COMMUNITY DEVELOPMENT
DHS 2009-00024

Mr. John Allen
Barbot, Steuart & Associates, Inc.
13861 Plantation Road #105
Fort Myers, FL 33912

RE: Lakes of Estero-Phase II
Public Informational Session Summary and Design Review Comments
Estero Design Review Committee Meeting on April 8, 2009
Location: The Estero Recreation Center

Dear Applicant and County Staff:

The above referenced project was presented to the EDRC on April 8, 2009 and has satisfied the public informational session as required per LDC, Sect.34-1042. The EDRC reviewed the submittal and discussed the design documents.

Discussion:

The Applicant presented plans for development of a site for residential use that fronts on Williams Road, east of River Ranch Road. This presentation was made after numerous objections were made to earlier submissions.

Comments & Stipulations:

- The monument sign requires a larger more proportional base. It should have a pre-cast concrete cornice approx. twelve inches high instead of the painted curved surface shown.
- The metal fence should be a dark color, preferably black
- The painting of the buildings should have color change on the different projections of the elevations to help provide them with more definition.
- Fascias on buildings need to be thickened (made deeper).

The EDRC, on behalf of the citizens of Estero, would like to thank the Applicant for the submittal and cooperation with the design review procedures.

Sincerely,

Thomas J. O'Dea
Co-Chairman, Estero Design Review Committee

RECEIVED
JAN 3 1 2013
COMMUNITY DEVELOPMENT

SITE DEVELOPMENT PLANS

FOR

LAKES OF ESTERO PHASES II

STRAP# 34-46-25-10-0000E.0000

AMENDMENT #1

INDEX OF SHEETS	
SHEET #	NAME
C1	COVER SHEET
C2	AERIAL
C3	SITE DIMENSIONING, PAVING, & PHASING PLAN
C4	NOTES & DETAILS
C5	SITE DRAINAGE PLAN
C6	EROSION CONTROL & POLLUTION PREVENTION PLAN
L 1 3	LANDSCAPING PLANS & CALCULATIONS
U1	MASTER UTILITY DISTRIBUTION PLAN
U2	GENERAL NOTES & OFFSITE UTILITY PLANS
U3	UTILITY DETAILS
U4 U10	UTILITY PROFILES

LEGAL DESCRIPTION:

TRACT E, LAKES OF ESTERO AS RECORDED IN PLAT BOOK 72 PAGES 78 THROUGH 83 OF THE PUBLIC RECORDS OF LEE COUNTY, FLORIDA

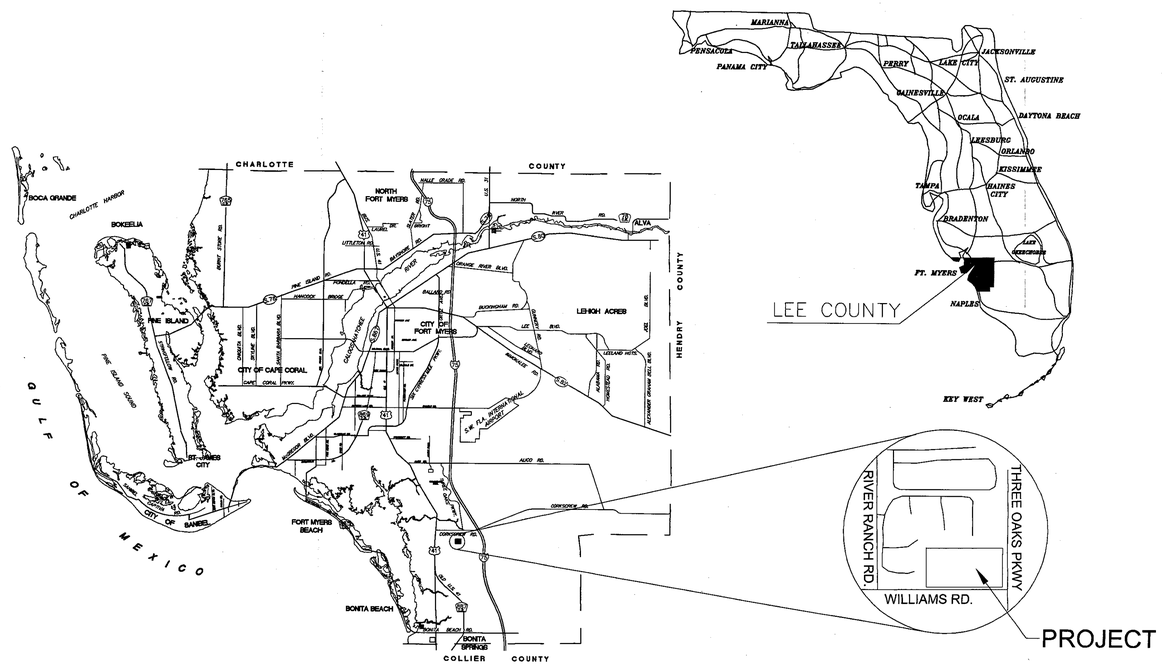

LOCATION MAP

NOT TO SCALE

OWNER:	CONIDARIS DEVELOPMENT COMPANY 15645 PINE RIDGE RD FORT MYERS FL 33908 (239) 415 7671
DEVELOPER:	CONIDARIS DEVELOPMENT COMPANY 15645 PINE RIDGE RD FORT MYERS FL 33908 (239) 415 7671
ENGINEER:	BARBOT, STEUART & ASSOCIATES, INC. 13861 PLANTATION ROAD, SUITE 105 FORT MYERS, FLORIDA 33912 (239) 936 7353
SURVEYOR:	STOUTEN ASSOCIATES, INC. 4423 SE 16TH PLACE, UNIT 18, CAPE CORAL, FL 33904 (239) 542 7499
LANDSCAPE ARCHITECT:	STEVEN F. DELLECAVE 5931 SEA GRASS LANE NAPLES, FL 34116 (239) 417 2688
ARCHITECT:	MATRIX ENGINEERING & DESIGN, LLC. 25435 WEST NEWBERRY ROAD NEW BERRY, FL 32669 (352) 474 6330
WATER:	LEE COUNTY UTILITIES 1500 MONROE STREET FORT MYERS, FLORIDA 33901 (239) 533 8181
SEWER:	LEE COUNTY UTILITIES 1500 MONROE STREET FORT MYERS, FLORIDA 33901 (239) 533 8181
ELECTRIC:	LEE COUNTY ELECTRIC COOPERATIVE 4980 BAYLINE DRIVE FORT MYERS, FLORIDA 33917 (800) 599 2356
TELEPHONE:	CENTURY LINK 10960 SOUTH CLEVELAND AVENUE FORT MYERS, FLORIDA 33907 (800) 786 6272
REFUSE:	WASTE PRO OF FLORIDA 13110 RICKENBACKER PKWY FORT MYERS, FLORIDA 33913 (239) 337 0800
FIRE:	ESTERO FIRE RESCUE 21500 THREE OAKS PKWY ESTERO, FL 33928 (239) 947 3473

CERTIFICATION NOTES:

ALL MATERIALS SHALL COMPLY WITH A.S.T.M. STANDARDS FOR CONSTRUCTION. ALL WORKMANSHIP MUST BE IN ACCORDANCE WITH THE 2010 FLORIDA BUILDING CODE AND ANY AMENDMENTS, 2008 NATIONAL ELECTRIC CODE, AND ANY AND ALL STATE & LOCAL CODES AND PRACTICES.

CONTRACTOR TO REVIEW FOR COMPLIANCE WITH ALL CURRENT BUILDING CODES, REVISIONS AND ADDITIONS, AND REVIEW ALL DIMENSIONS AND SPECIFICATION WITH OWNERS AND DESIGNERS PRIOR TO COMMENCEMENT.

OWNER AND CONTRACTOR ARE HEREBY PUT ON NOTICE THAT ANY DEVIATIONS FROM SPECIFICATIONS, DRAWINGS OR CODES MUST BE APPROVED IN WRITING BY THE GOVERNMENT REGULATORY AGENCIES.

CONTRACTOR RESPONSIBILITIES:

IF ANY ERRORS OR OMISSIONS EXIST IN THE DRAWINGS AND SPECIFICATIONS, THE CONTRACTOR SHALL WITHIN 10 BUSINESS DAYS AFTER RECEIPT OF THESE PLANS AND SPECIFICATIONS, AND PRIOR TO THE START OF ANY CONSTRUCTION NOTIFY THE ENGINEER IN WRITING OF SUCH ERRORS OR OMISSIONS OR BE HELD RESPONSIBLE FOR THE RESULT AND COST OF RECTIFYING THE SAME.

ENGINEER DOES NOT ASSUME ANY RESPONSIBILITY FOR THE SUPERVISION OF CONSTRUCTION. CONTRACTOR TO STRICTLY FOLLOW THE 2004 FLORIDA BUILDING CODES AND ANY AND ALL STATE AND LOCAL CODES AND PRACTICES AND ANY AMENDMENTS/REVISIONS.

CONTRACTOR SHALL LOCATE AND PROTECT ALL EXISTING UTILITIES PRIOR TO THE START OF ANY CONSTRUCTION. A PRE-CONSTRUCTION MEETING WITH THE UTILITY PROVIDER AND ENGINEER IS REQUIRED PRIOR TO THE START OF ANY CONSTRUCTION

BARBOT, STEUART & ASSOC., INC.

HEREBY RESERVES IT'S COMMON LAW COPYRIGHT AND ALL OTHER PROPERTY RIGHTS IN THESE PLANS, IDEAS AND DESIGNS. THESE PLANS IDEAS AND DESIGNS ARE NOT TO BE REPRODUCED, CHANGED OR COPIED IN ANY FORM OR MANNER WHATSOEVER, NOR ARE THEY TO BE ASSIGNED TO ANY THIRD PARTY, WITHOUT THE EXPRESS WRITTEN CONSENT OF BARBOT, STEUART & ASSOCIATES, INC. THE CONTRACTOR/OWNER SHALL VERIFY AND BE RESPONSIBLE FOR ALL DIMENSIONS AND CONDITIONS SHOWN IN THESE PLANS

STATEMENT OF COMPLIANCE

THESE PLANS WERE PREPARED AND SHALL COMPLY WITH THE 2010 FLORIDA BUILDING CODE & ANY AMENDMENTS, THE 2008 NATIONAL ELECTRIC CODE, THE 2004 FLORIDA FIRE PREVENTION CODE, THE 2010 FLORIDA ACCESSIBILITY CODE, THE 2010 FLORIDA ENERGY CODE, THE 2006 N.F.P.A. 101 LIFE SAFETY CODE AND ALL OTHER APPLICABLE STATE AND LOCAL CODES AND PRACTICES

DO NOT SCALE DRAWINGS

DUE TO THE IRREGULARITIES IN REPRODUCTION, USE ONLY GIVEN DIMENSIONS. REPORT ANY DISCREPANCIES OF DIMENSION TO THE ENGINEER OR CONSTRUCTION SUPERINTENDENT BEFORE PROCEEDING WITH ANY WORK.

B S A

BARBOT, STEUART & ASSOCIATES, INC.

CONSULTING ENGINEERS

13861 PLANTATION ROAD, SUITE 105 - FORT MYERS, FLORIDA 33912

PHONE: (239) 936-7353 FAX: (239) 936-5823 EMAIL: MAIN@BSAENGINEERING.NET

CERTIFICATE OF AUTHORIZATION NUMBER:5464

Division of Development Services
D.O. AMENDMENT # A21
APPROVED
By [signature] Date 7/12/2013
For Project planning
*Approval based on site information supplied by applicant.

RECEIVED
JUN 18 2013
A12
COMMUNITY DEVELOPMENT

DOS2009-00023

IAN K. STEUART
LICENSE
No. PE 42796
STATE OF FLORIDA
PROFESSIONAL ENGINEER

PROJECT NUMBER: 6634

E:\BARBOT, STEUART & ASSOCIATES, INC. - o:\6634 lakes of estero - mobile\drawings\2012\6634.dwg, 121812.dwg, - 6/6/2013 1:06 PM

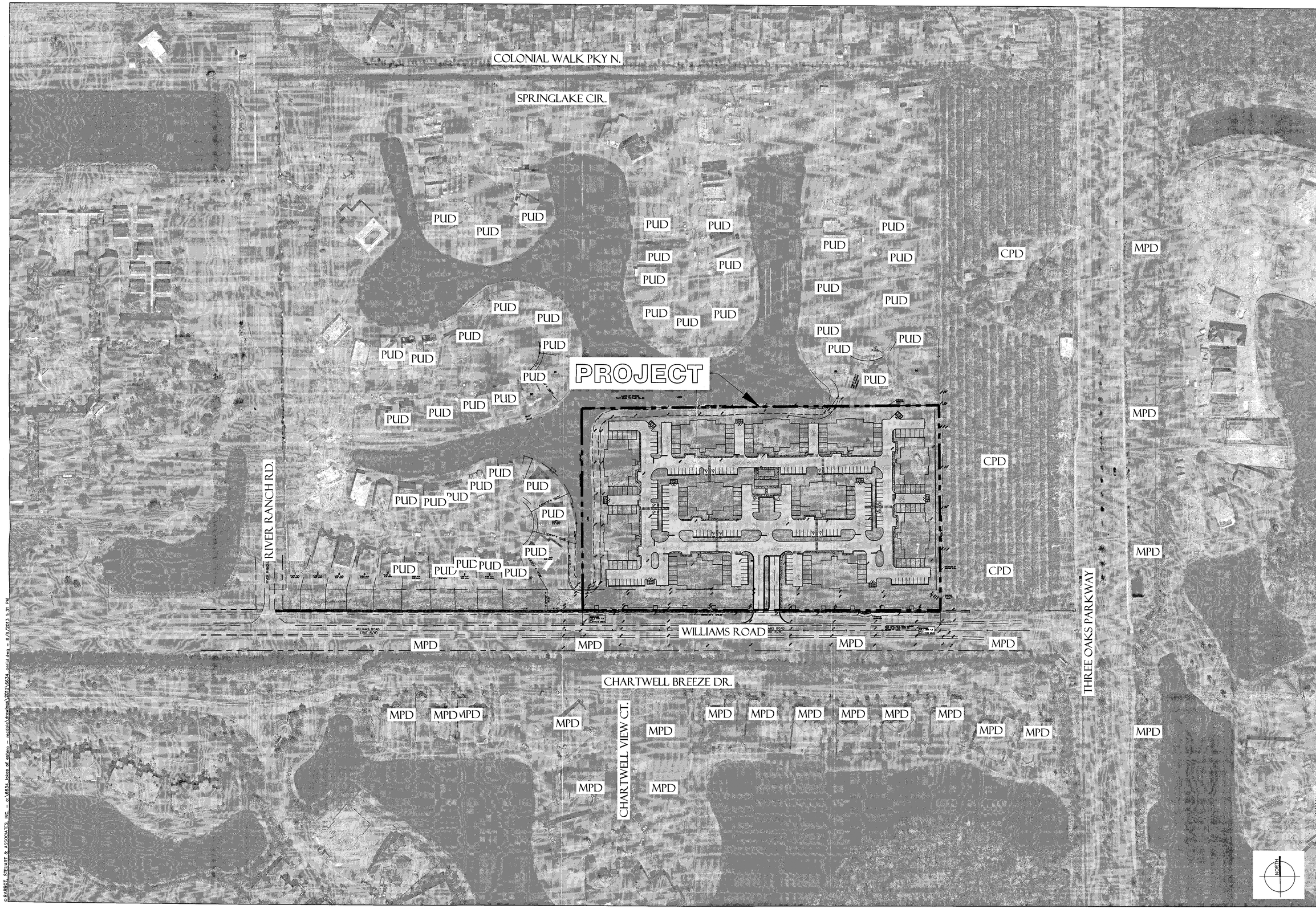

DATE	REVISIONS	CHKD BY

BARBOT, STEUART & ASSOCIATES, INC.
CONSULTING ENGINEERS
13661 PLANTATION ROAD, SUITE 105 · FORT MYERS, FLORIDA 33912
PHONE: (239) 936-7353 FAX: (239) 936-5823 EMAIL: MAIN@BSAENGINEERING.NET
CERTIFICATE OF AUTHORIZATION NUMBER: 5464

AERIAL
2005 AERIAL PHOTOGRAPHY
PROVIDED BY LEE CO. PROPERTY APPRAISER
LAKES OF ESTERO PHASE II
WILLIAMS ROAD, ESTERO, FLORIDA
STRAP # 34-46-25-01-00000.0000
S.P.#

PREPARED UNDER THE DIRECTION OF:
JOHN K. STEUART, P.E.
FL REG. #15796
EXHIBIT NUMBER
C2

SCALE: 1" = 100
PROJECT NUMBER: 6634
DATE: 1/29/13
DESIGNED BY: JKS
DRAWN BY: ADS
FILE: 6634_AERIAL.DWG

LDC
JUL 12 2013
APPROVED

© BARBOT, STEUART & ASSOCIATES, INC. – o:\6634_lakes of estero – mobile\drawings\2012\6634_aerial.dwg – 6/6/2013 1:31 PM

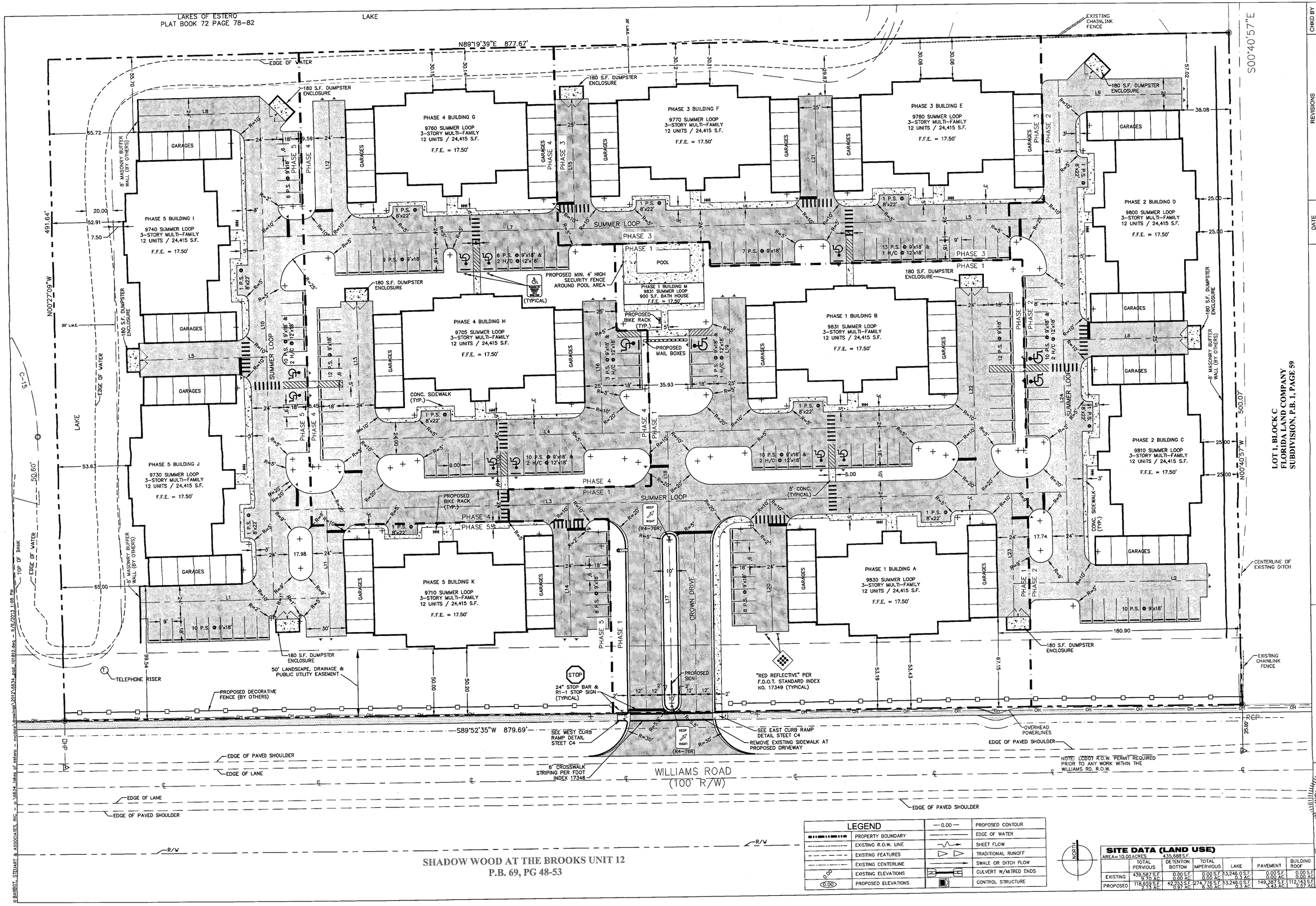

LEGEND			
	PROPERTY BOUNDARY	—0.00—	PROPOSED CONTOUR
	EXISTING R.O.W. LINE		EDGE OF WATER
	EXISTING FEATURES		SHEET FLOW
	EXISTING CENTERLINE		TRADITIONAL RUNOFF
0.00	EXISTING ELEVATIONS		SWALE OR DITCH FLOW
(0.00)	PROPOSED ELEVATIONS		CULVERT W/MITRED ENDS
			CONTROL STRUCTURE

SITE DATA (LAND USE)

AREA= 10.00 ACRES 435,688 S.F.

	TOTAL PERVIOUS	DETENTION BOTTOM	TOTAL IMPERVIOUS	LAKE	PAVEMENT	BUILDING ROOF
EXISTING	439,587 S.F. 9.70 AC.	0.00 S.F. 0.00 AC.	0.00 S.F. 0.00 AC.	13,246.0 S.F. 0.3 AC.	0.00 S.F. 0.00 AC.	0.00 S.F. 0.00 AC.
PROPOSED	118,659 S.F. 2.73 AC.	42,253 S.F. 0.97 AC.	274,776 S.F. 6.30 AC.	13,246.0 S.F. 0.3 AC.	149,987 S.F. 3.43 AC.	112,123 S.F. 2.57 AC.

DATE	REVISIONS	CHKD BY
6/6/2013	REVISED PER 2/20/2013 CHECKLIST	DDS | K.S.

LOT 1, BLOCK C
FLORIDA LAND COMPANY
SUBDIVISION, P.B. 1, PAGE 59

BARBOT, STEUART & ASSOCIATES, INC.
CONSULTING ENGINEERS
13961 PLANTATION ROAD, SUITE 105 · FORT MYERS, FLORIDA 33912
PHONE: (239) 936-7353 FAX: (239) 936-5823 EMAIL: MAIN@BSAENGINEERING.NET
CERTIFICATE OF AUTHORIZATION NUMBER:5464

SITE DIMENSIONING, PAVING & PHASING PLANS

LAKES OF ESTERO PHASE II

WILLIAM ROAD, ESTERO, FLORIDA 33928
STRAP # 34-46-25-10-00000E.0000
S.F.#2

FILE: 6634_PGD_101812.DWG
DRAWN BY: JTA/DDS
DESIGNED BY: MRP
DATE: 1/28/13
SCALE: 1" = 30
PROJECT NUMBER: 6634
SHEET: C-3

PREPARED UNDER THE DIRECTION OF: MARK STEUART III, P.E. REG. #15786

LDC
JUL 12 2013
APPROVED

© BARBOT, STEUART & ASSOCIATES, INC. – o:\6634_lakes of estero – mcdod\drawings\2012\6634_pgd_101812.dwg – 6/6/2013 1:08 PM

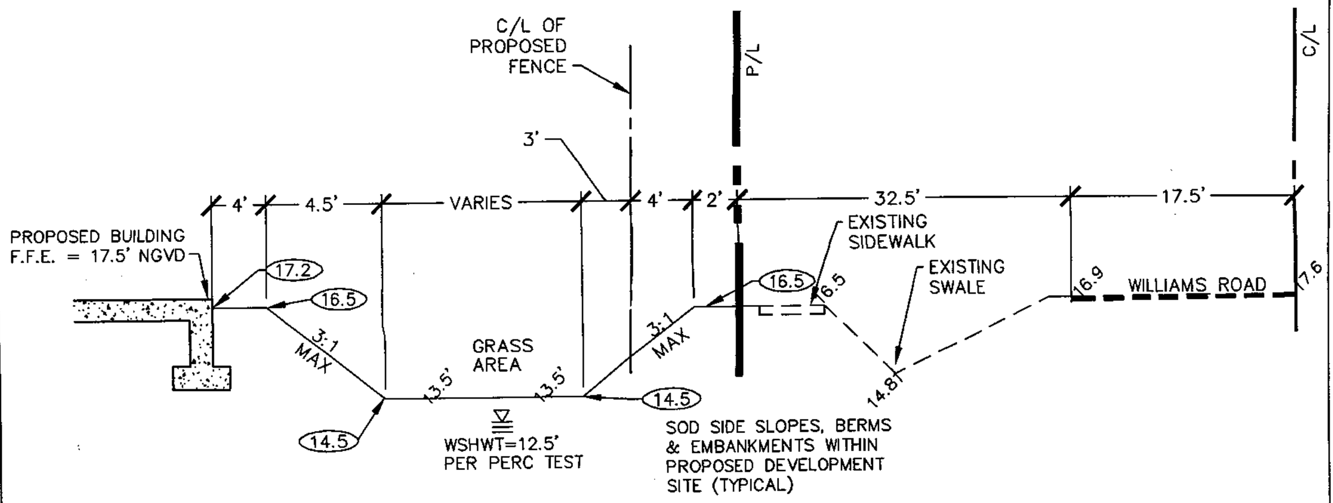

CROSS-SECTION A (A / C4)
NOT TO SCALE

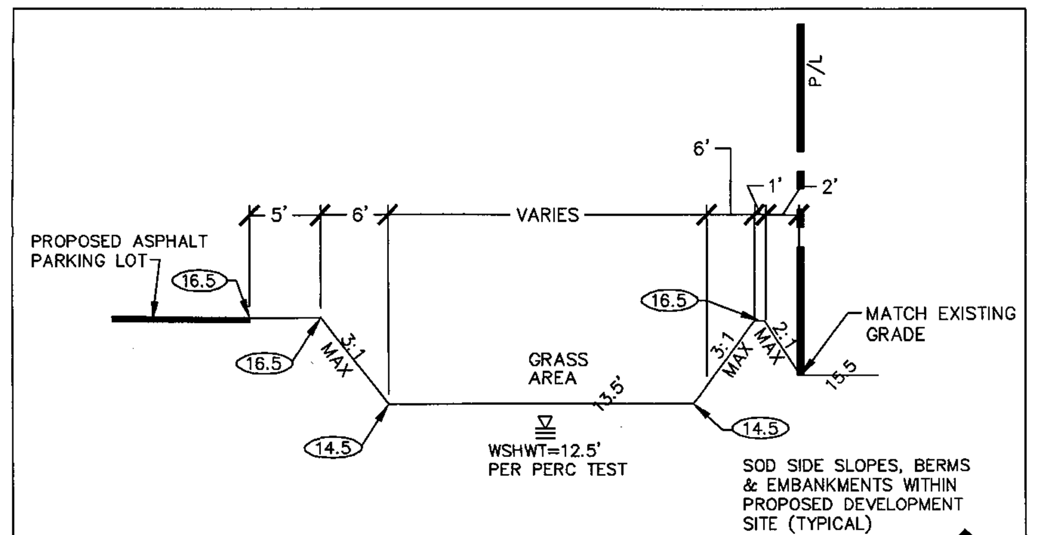

CROSS-SECTION B (B / C4)
NOT TO SCALE

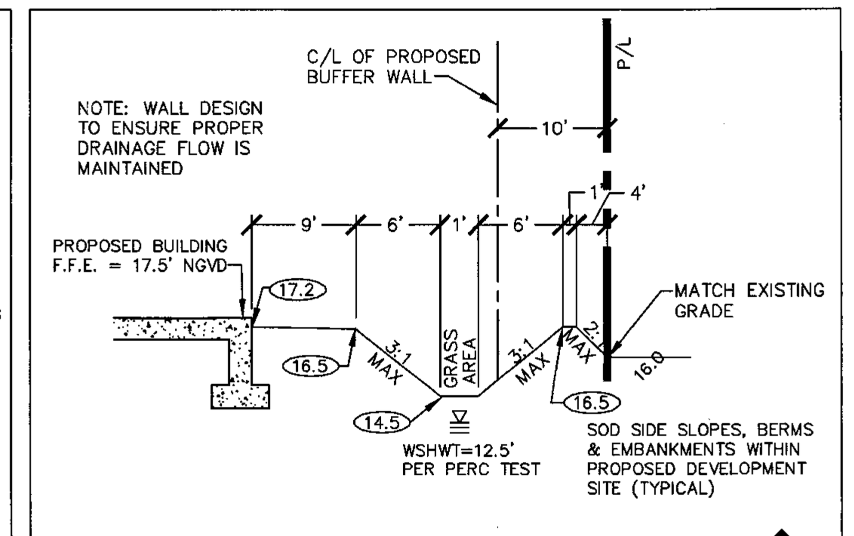

CROSS-SECTION C (C / C4)
NOT TO SCALE

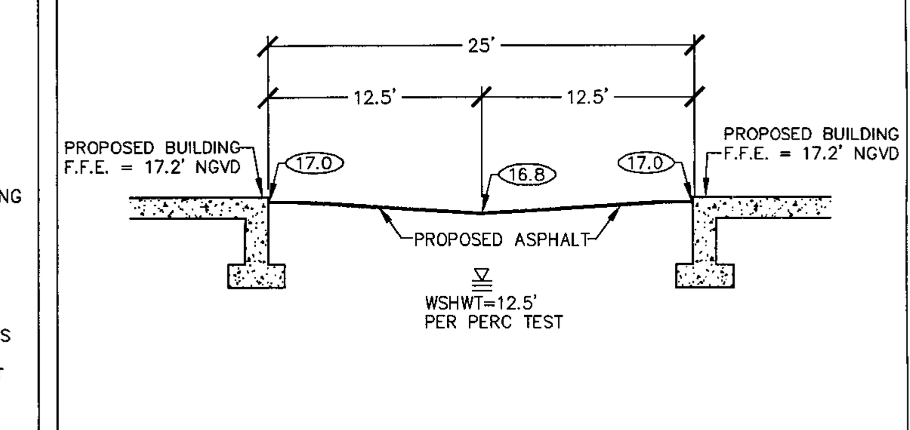

CROSS-SECTION D (D / C4)
NOT TO SCALE

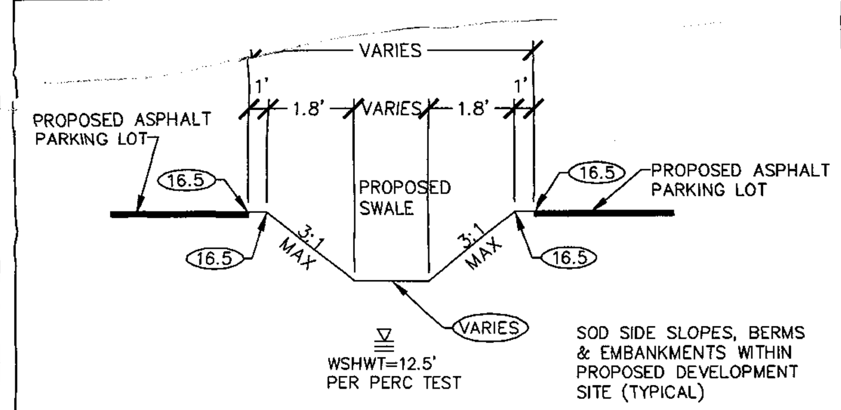

CROSS-SECTION E (E / C4)
NOT TO SCALE

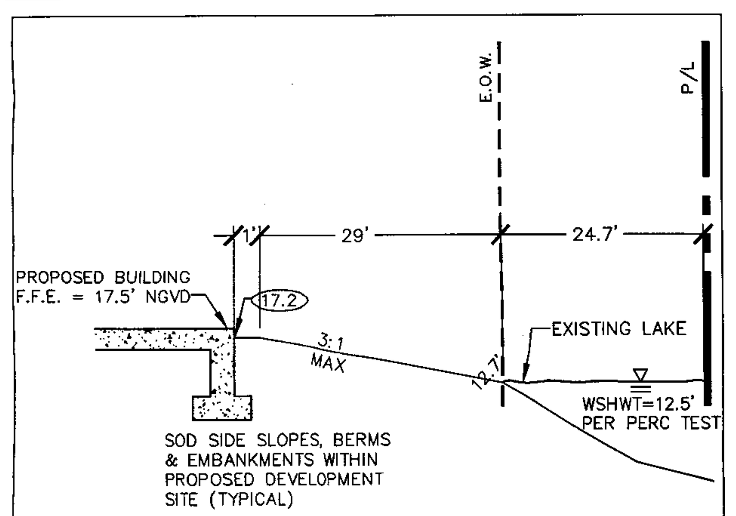

CROSS-SECTION F (F / C4)
NOT TO SCALE

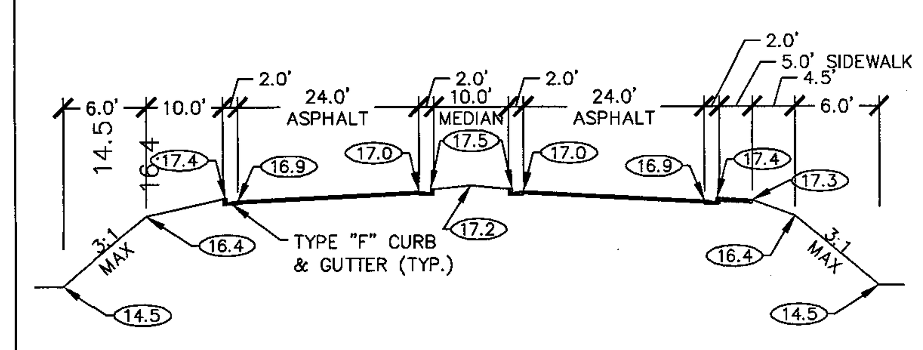

CROSS-SECTION G (G / C4)
NOT TO SCALE

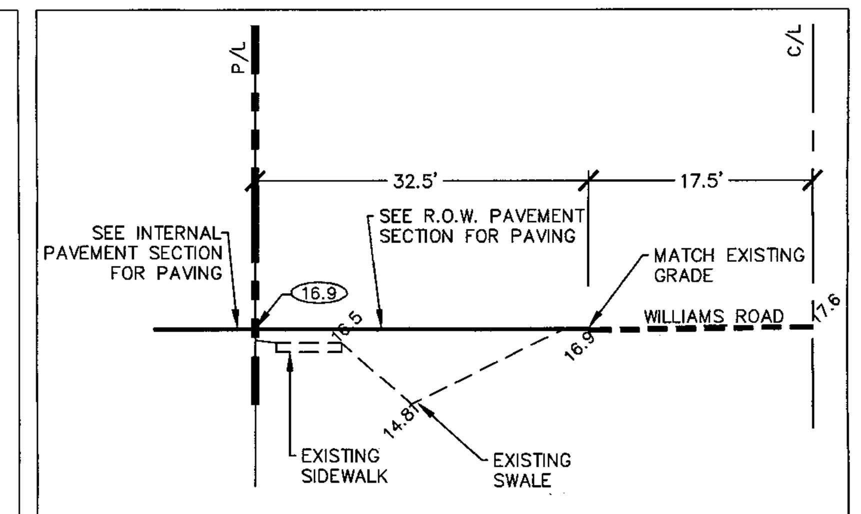

CROSS-SECTION H (H / C4)
NOT TO SCALE

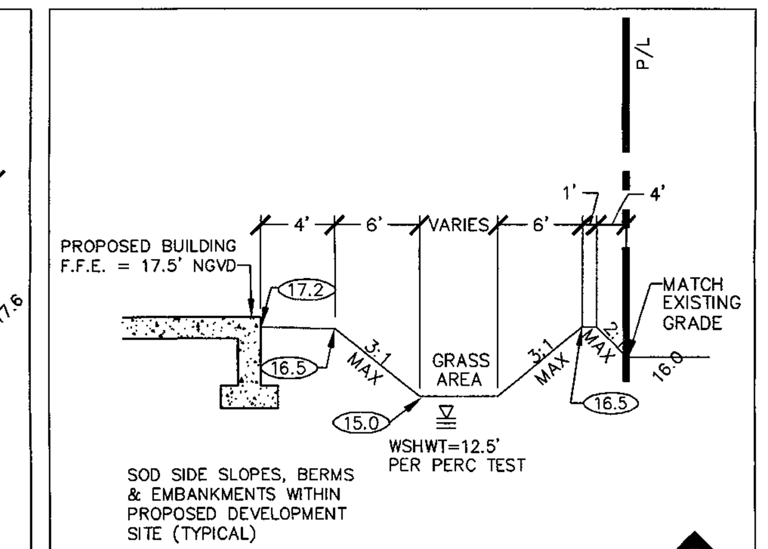

CROSS-SECTION I (I / C4)
NOT TO SCALE

NOTES:

1. ALL SWALES ARE GRADES @ 0.2% MIN.
2. ALL ADJACENT AREAS DISTURBED DURING CONSTRUCTION MUST RECEIVE GROUND COVER SUCH AS SOD AND OR SEED AND MULCH.
3. ALL SLOPES, DRAINAGE AREAS AND AREA ADJACENT TO PAVEMENT MUST BE SODDED.
4. THIS SITE HAS A POSITIVE OUT FALL FOR ALL RETENTION AREAS AND ALL RUNOFF IS DIRECTED TO THESE RETENTION AREAS.
5. ALL ELEVATIONS ARE BASED UPON N.G.V.D. (1929).
6. A LEE COUNTY RIGHT-OF-WAY PERMIT IS REQUIRED.
7. PROPERTY LINES AT STREET INTERSECTIONS SHALL BE ROUNDED WITH A MINIMUM 30' RADIUS.
8. ALL SIGNS MUST BE SET BACK A MINIMUM OF 15' FROM ALL PROPERTY LINES.
9. NO NEGATIVE IMPACT ON GROUND OR SURFACE WATER.
10. COMPLEX TRADITIONAL RUNOFF FLOWS, SEE DIAGRAM DEPICTING THE SURFACE HYDROLOGY OF THE SITE.
11. THE ENGINEER CERTIFIES THAT THIS SITE CAN BE USED SAFELY FOR BUILDING PURPOSES WITHOUT UNDUE DANGER FROM FLOOD OR ADVERSE SOIL OR FOUNDATION CONDITIONS.
12. PROJECT DOES NOT IMPACT ANY FLOOD PLAINS OR RIVERINE AREAS.
13. PROJECT TO HAVE A SECURITY FENCE. SEE PLAN FOR LOCATION.
14. IF OVER 1 ACRE, 48 HOURS PRIOR TO THE START OF ANY CONSTRUCTION A NOTICE OF INTENT MUST BE FILED WITH F.D.E.P. & THE DIVISION OF DEVELOPMENT SERVICES.
15. AN OPAQUE VISUAL BARRIER, CONSTRUCTED OF MATERIALS WHICH CONFORM TO APPLICABLE CODES, MUST BE ERECTED & MAINTAINED TO CONCEAL COMMERCIAL TYPE TRASH RECEPTACLES. THE SCREEN MUST BE CONSTRUCTED ALONG AT LEAST THREE SIDES OF THE CONTAINER & MUST EXTEND AT LEAST 6" ABOVE THE HEIGHT OF THE CLOSED CONTAINER, EXCEPT THAT IN NO CASE SHALL THE HEIGHT OF THE BARRIER EXCEED 6'.
16. DUMPSTER PAD IS TO BE PAVED WITH CONCRETE, AND THE TOP SURFACE OF THE PAD IS TO BE AT THE SAME ELEVATION AS ADJACENT PAVEMENT.
17. SEDIMENT FENCE TO BE INSTALLED PRIOR TO CONSTRUCTION. THE SILT FENCE TO BE MAINTAINED IN GOOD REPAIR UNTIL ALL CONSTRUCTION HAS BEEN COMPLETED AND THE AREA STABILIZED AS REQUIRED.
18. NO OUTDOOR LIGHTING WILL BE USED.
19. ALL STORAGE CONTAINERS & DUMPSTERS MUST BE ADEQUATELY SHIELDED BY A WALL OR FENCE ALONG AT LEAST 3 SIDES. MINIMUM OVERHEAD CLEARANCE OF 22' IS REQUIRED. ENCLOSURE DESIGN MUST BE CONSISTENT WITH THE MATERIALS & COLORS OF THE BUILDING SERVED.
20. NO CONSTRUCTION ACTIVITIES SHALL COMMENCE WITHIN THE PUBLIC R.O.W. UNTIL APPROPRIATE PERMITS HAVE BEEN ISSUED.

DRAINAGE CALCS:

1/2" INCH REQUIRED: TOTAL AREA(sf) * 1/24
439,587 * 1 / 24 = 18,316 CF.
RETENTION REQUIRED: 18,316 C.F. = 0.42 AC-FT.
RETENTION PROVIDED: 36,011 C.F. = 0.81 AC-FT.

EXISTING SFWMD PERMIT# 36-00917-S
MODIFICATION PERMIT HAS BEEN APPLIED FOR.
MAX. LOT COVERAGE PER GENERAL PERMIT IS 75.00%
THIS PHASE OF THE PROJECT IS PROPOSED @ 59.5%

REFUSE CALCS:

MULTIFAMILY DEVELOPMENTS OVER 25 UNITS:

168 S.F. FOR FIRST 25 UNITS + 4.8 S.F. FOR EACH ADDITIONAL UNIT.

132 UNITS - 25 = 107 UNITS x 4.8 S.F./UNIT = 513.6 S.F.

TOTAL REFUSE AREA REQUIRED: 168 S.F. + 513.6 S.F. = 681.6 S.F.
TOTAL REFUSE AREA PROVIDED: 1,620 S.F.

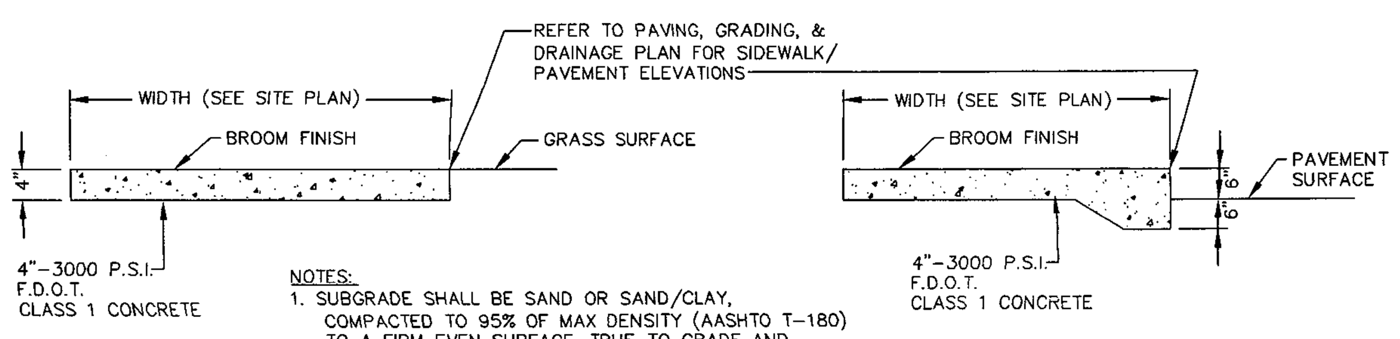

NOTES:
1. SUBGRADE SHALL BE SAND OR SAND/CLAY, COMPACTED TO 95% OF MAX DENSITY (AASHTO T-180) TO A FIRM EVEN SURFACE, TRUE TO GRADE AND CROSS SECTION, AND SHALL BE MOIST WHEN CONCRETE IS PLACED.
2. SAW-CUT 1-1/2" DEEP CONTROL JOINTS @ 5' O.C.

SIDEWALK DETAIL
NOT TO SCALE

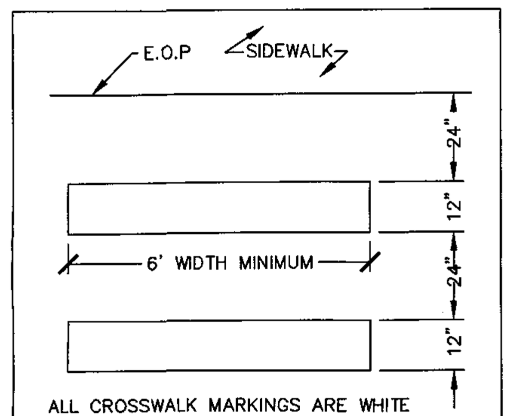

CROSSWALK STRIPING
NOT TO SCALE

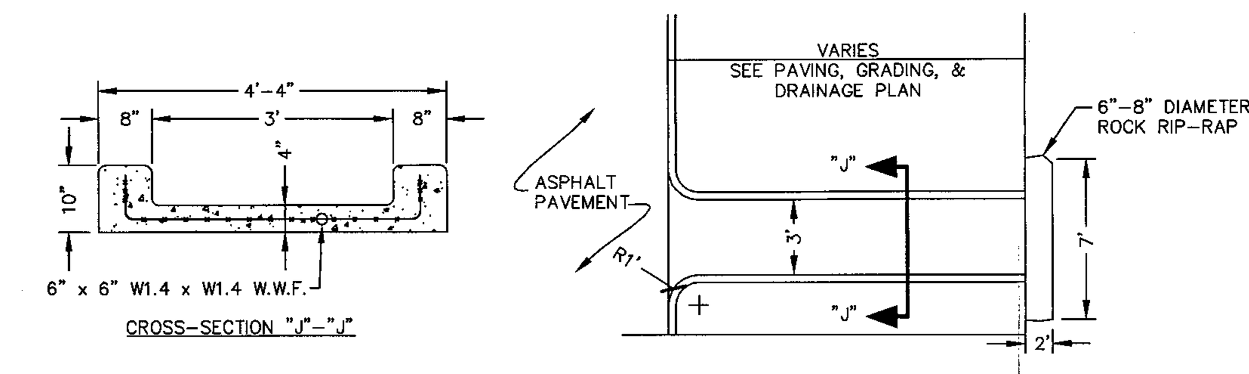

FLUME DETAILS
NOT TO SCALE

PHASING DESCRIPTION

PHASE 1	A. ALL OFF-SITE IMPROVEMENTS AND CONNECTIONS TO POTABLE WATER AND GRAVITY SEWER SYSTEMS. B. CONSTRUCTION OF BUILDINGS A AND B, RELATED PARKING AND IMPROVEMENTS. C. PAVING FOR INTERNAL ROADWAY AND DRIVE AISLES TO SERVE BUILDINGS A AND B. REMAINDER OF INTERNAL ROADWAY TO BE BASE ROCK. D. ON-SITE UTILITIES REQUIRED TO SERVE BUILDINGS A AND B AND CONNECT TO OFF-SITE UTILITY SYSTEMS AS REQUIRED. E. PERIMETER LANDSCAPE BUFFERS, GENERAL LANDSCAPING AND IRRIGATION PER APPROVED PLANS. F. BUILDING PERIMETER LANDSCAPING FOR BUILDINGS A AND B. G. SWIMMING POOL AND ASSOCIATED BATH HOUSE. H. SEE ATTACHED PHASING PLAN FOR GRAPHICAL REPRESENTATION. I. ALL EARTHWORK, DRAINAGE FEATURES, AND CONVEYANCE SYSTEMS.
PHASE 2	A. CONSTRUCTION OF BUILDINGS C AND D AND ASSOCIATED PARKING. B. PAVING OF INTERNAL ROADWAYS AND DRIVE AISLES TO SERVE BUILDINGS C AND D. C. CONNECTION TO EXISTING ON-SITE UTILITY SYSTEMS. D. BUILDING PERIMETER LANDSCAPING FOR BUILDINGS C AND D. E. SEE ATTACHED PHASING PLAN FOR GRAPHICAL REPRESENTATION.
PHASE 3	A. CONSTRUCTION OF BUILDINGS E AND F, RELATED PARKING AND IMPROVEMENTS. B. PAVING OF INTERNAL ROADWAYS AND DRIVE AISLES TO SERVE BUILDINGS E AND F. C. GRAVITY SEWER, POTABLE WATER, AND FIRE PROTECTION SYSTEMS TO SERVE BUILDINGS E & F. D. BUILDING PERIMETER LANDSCAPING FOR BUILDINGS E AND F. E. SEE ATTACHED PHASING PLAN FOR GRAPHICAL REPRESENTATION.
PHASE 4	A. CONSTRUCTION OF BUILDINGS G AND H, RELATED AND PARKING AND IMPROVEMENTS. B. PAVING OF INTERNAL ROADWAYS AND DRIVE AISLES TO SERVE BUILDINGS G AND H. C. GRAVITY SEWER, POTABLE WATER, AND FIRE PROTECTION SYSTEMS TO SERVE BUILDINGS G & H. D. BUILDING PERIMETER LANDSCAPING FOR BUILDINGS G AND H. E. SEE ATTACHED PHASING PLAN FOR GRAPHICAL REPRESENTATION.
PHASE 5	A. CONSTRUCTION OF BUILDINGS I, J AND K. B. PAVING OF INTERNAL ROADWAYS AND DRIVE AISLES TO SERVE BUILDINGS I, J AND K. C. GRAVITY SEWER, POTABLE WATER, AND FIRE PROTECTION SYSTEMS TO SERVE BUILDINGS I, J, & K. D. BUILDING PERIMETER LANDSCAPING FOR BUILDINGS I, J AND K. E. SEE ATTACHED PHASING PLAN FOR GRAPHICAL REPRESENTATION.

PARKING CALCS

PHASE	PARKING REQUIRED	PARKING PROVIDED
1	(24 UNITS)x(2 SPACES/UNIT)x(110%) = 53 SPACES	62
2	(24 UNITS)x(2 SPACES/UNIT)x(110%) = 53 SPACES	48
3	(24 UNITS)x(2 SPACES/UNIT)x(110%) = 53 SPACES	47
4	(24 UNITS)x(2 SPACES/UNIT)x(110%) = 53 SPACES	71
5	(36 UNITS)x(2 SPACES/UNIT)x(110%) = 79 SPACES	75
TOTAL	291 SPACES	303

NOTES:
PROPERTY ZONED: P.U.D.
PER LEE COUNTY LAND DEVELOPMENT CODE, ZONING, CHAPTER 34, ARTICLE VII, DIVISION 26, SECTION 34-2020.1.c.
DWELLING, HOUSING, AND LIVING UNITS (MULTI-FAMILY BUILDINGS)

NOTE ON NUMBER OF UNINTERRUPTED PARKING SPACES:
NO MORE THAN AN AVERAGE OF 10 PARKING SPACES OCCUR IN AN UNINTERRUPTED ROW:
(8 P.S.+11 P.S.+5 P.S.+15 P.S.+13 P.S.+10 P.S.+14 P.S.+ 8 P.S.+8 P.S.+4 P.S.+4 P.S.+14 P.S.+10 P.S.+13 P.S.+15 P.S.+ 1 P.S.+13 P.S.+(3 P.S. x 11)+(2 P.S. x 11)/39 ROWS = 5.67 AVERAGE

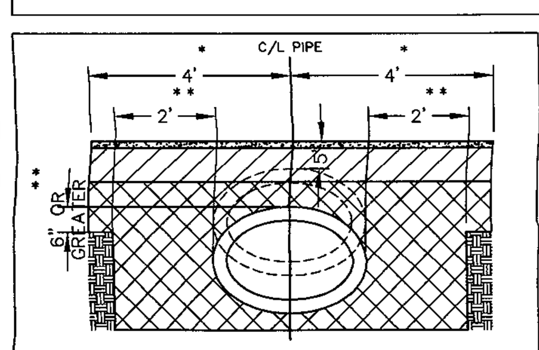

* WHEN TOP OF PIPE IS LESS THAN 5" FROM BOTTOM OF ASPHALT COURSE, CONTRACTOR SHALL BE REQUIRED TO USE ASPHALT BASE STRUCTURAL COURSE OVER PIPE AND 4' BEYOND EACH SIDE OF CENTER OF PIPE. (ABC BASE WILL MEET FDOT SPECIFICATIONS)

** CONTRACTOR SHALL COMPACT EXTRA LIME ROCK BASE FROM THE BOTTOM OF THE SUB GRADE TO THE BOTTOM THE BASE, 2' EACH SIDE, WHENEVER PIPE ENCROACHES INTO THE SUB GRADE 6" OR MORE. DENSITY TESTS WILL BE REQUIRED EACH SIDE OF PIPE IN EXTRA BASE.

EXTRA BASE DETAIL
NOT TO SCALE

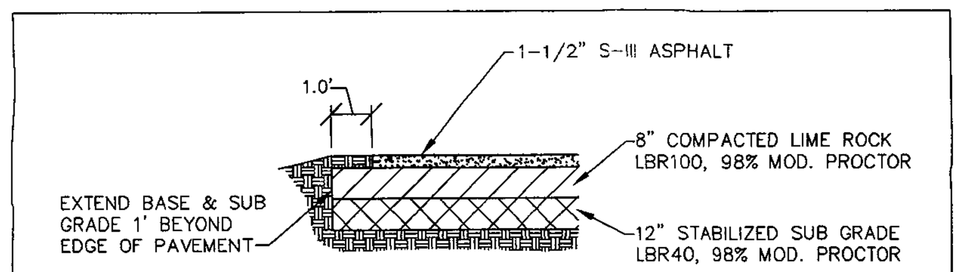

PROPOSED INTERNAL PAVEMENT SECTION
NOT TO SCALE

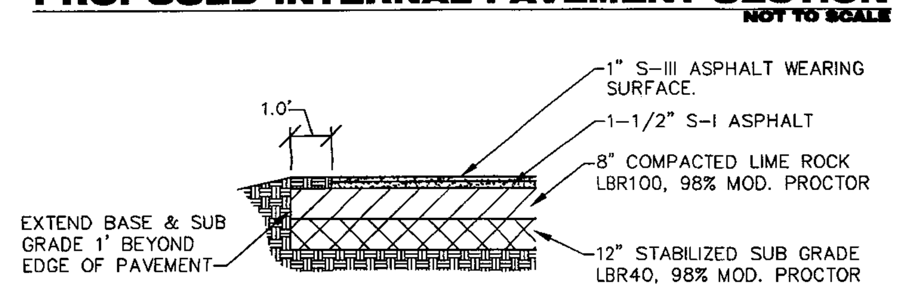

R.O.W. PAVEMENT SECTION
NOT TO SCALE

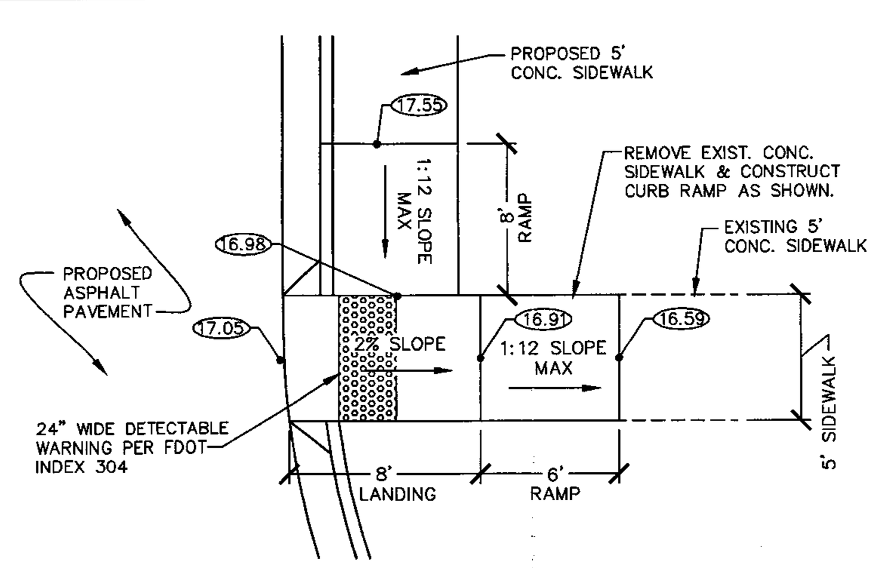

EAST CURB RAMP DETAIL
NOT TO SCALE

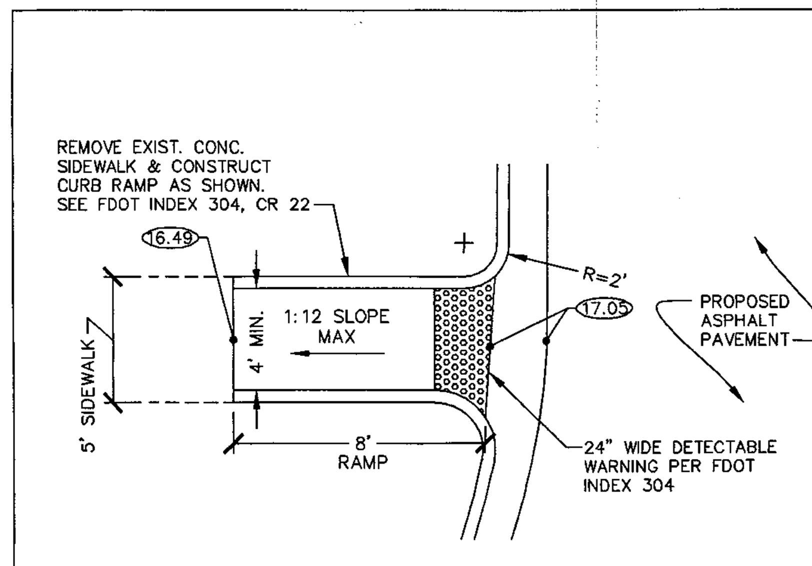

WEST CURB RAMP DETAIL
NOT TO SCALE

DRAINAGE PIPE SCHEDULE

PIPE	SIZE	LENGTH	INVERT ELEVATION	MATERIAL
P1	18"	23'-0"	15.0 NW, 15.0 SE	H.D.P.E PIPE W/M.E.S.
P2	10"	56'-0"	15.0 NW, 15.0 SE	H.D.P.E PIPE W/M.E.S.
P3	10"	36'-6"	15.0 NE, 15.0 SW	H.D.P.E PIPE W/M.E.S.
P4	10"	35'-0"	15.0 W, 15.0 E	H.D.P.E PIPE W/M.E.S.
P5	10"	28'-0"	15.0 W, 15.0 E	H.D.P.E PIPE W/M.E.S.
P6	10"	26'-0"	14.5 W, 14.5 E	H.D.P.E PIPE W/M.E.S.
P7	10"	88'-0"	14.5 W, 14.5 E	H.D.P.E PIPE W/M.E.S.
P8	10"	45'-0"	15.0 W, 15.0 E	H.D.P.E PIPE W/M.E.S.
P9	15"	86'-0"	14.89 W, 14.86 E	H.D.P.E PIPE W/M.E.S.
P10	18"	102'-0"	13.5 W, 13.5 E	H.D.P.E PIPE W/M.E.S.
P11	10"	38'-0"	15.0 S, 15.0 N	H.D.P.E PIPE W/M.E.S.
P12	10"	44'-0"	15.0 E, 15.0 W	H.D.P.E PIPE W/M.E.S.
P13	10"	46'-0"	15.0 SW, 15.0 NE	H.D.P.E PIPE W/M.E.S.
P14	10"	123'-0"	15.0 SE, 14.5 NW	H.D.P.E PIPE W/M.E.S.
P15	10"	12'-0"	14.5 W, 14.5 E	H.D.P.E PIPE W/M.E.S.
P16	10"	12'-0"	14.5 W, 14.5 E	H.D.P.E PIPE W/M.E.S.
P17	10"	88'-0"	14.5 W, 14.5 E	H.D.P.E PIPE W/M.E.S.
P18	10"	122'-0"	14.5 N, 15.0 S	H.D.P.E PIPE W/M.E.S.
P19	10"	38'-0"	15.0 W, 15.0 E	H.D.P.E PIPE W/M.E.S.
P20	18"	23'-0"	15.0 NW, 15.0 SE	H.D.P.E PIPE W/M.E.S.
P21	10"	30'-0"	15.0 W, 15.0 E	H.D.P.E PIPE W/M.E.S.
P22	10"	29'-0"	15.0 W, 15.0 E	H.D.P.E PIPE W/M.E.S.
P23	10"	37'-0"	15.0 W, 15.0 E	H.D.P.E PIPE W/M.E.S.
P24	10"	38'-0"	15.0 NW, 15.0 SE	H.D.P.E PIPE W/M.E.S.
P25	10"	58'-0"	15.0 S, 15.0 N	H.D.P.E PIPE W/M.E.S.

LINE TABLE

LINE	LENGTH	BEARING
L1	141'	N89°19'E
L2	144.6'	N89°19'E
L3	594.1'	N89°19'E
L4	457.9	N89°19'E
L5	94.2'	N89°19'E
L6	92.7	N89°19'E
L7	594.1'	N89°19'E
L8	89.7'	N89°19'E
L9	91.7'	N89°19'E
L10	373.3'	S00°41'E
L11	94'	S00°41'E
L12	99.3'	S00°41'E
L13	154.3'	S00°41'E
L14	98.3'	S00°41'E
L15	95.9'	S00°41'E
L16	98'	S00°41'E
L17	156.7'	S00°07'E
L18	52'	S00°41'E
L19	98'	S00°41'E
L20	98.3'	S00°41'E
L21	94.3'	S00°41'E
L22	153.8'	S00°41'E
L23	91.9'	S00°41'E
L24	373.5'	S00°41'E

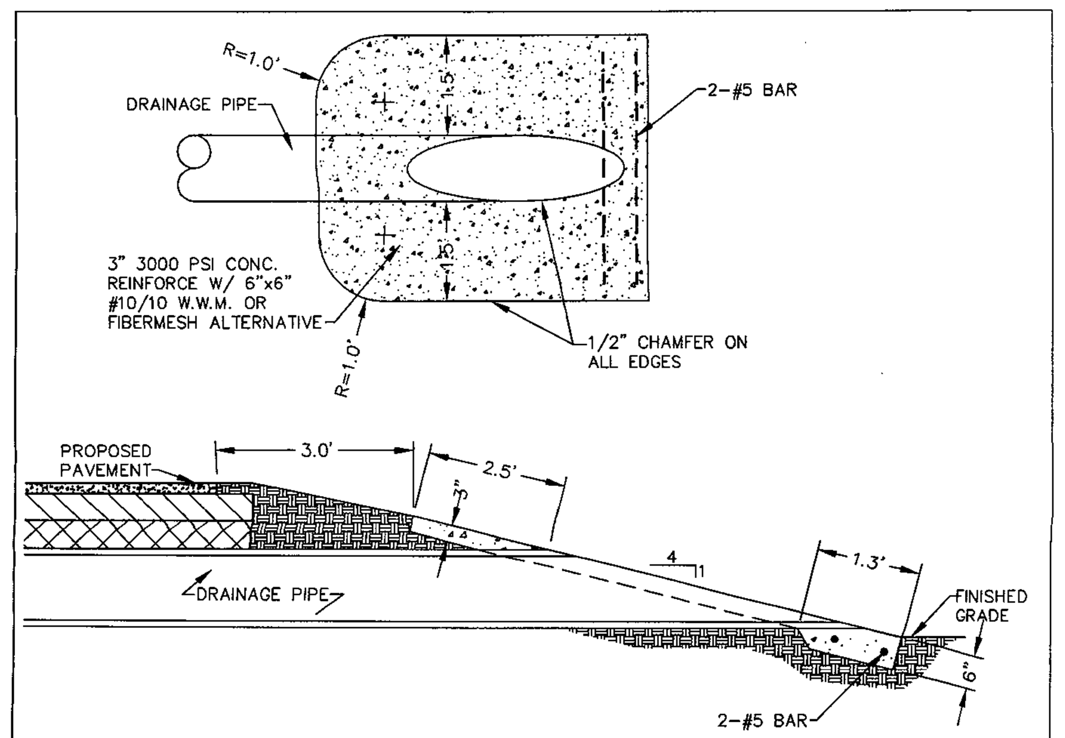

MITERED END SECTION
NOT TO SCALE

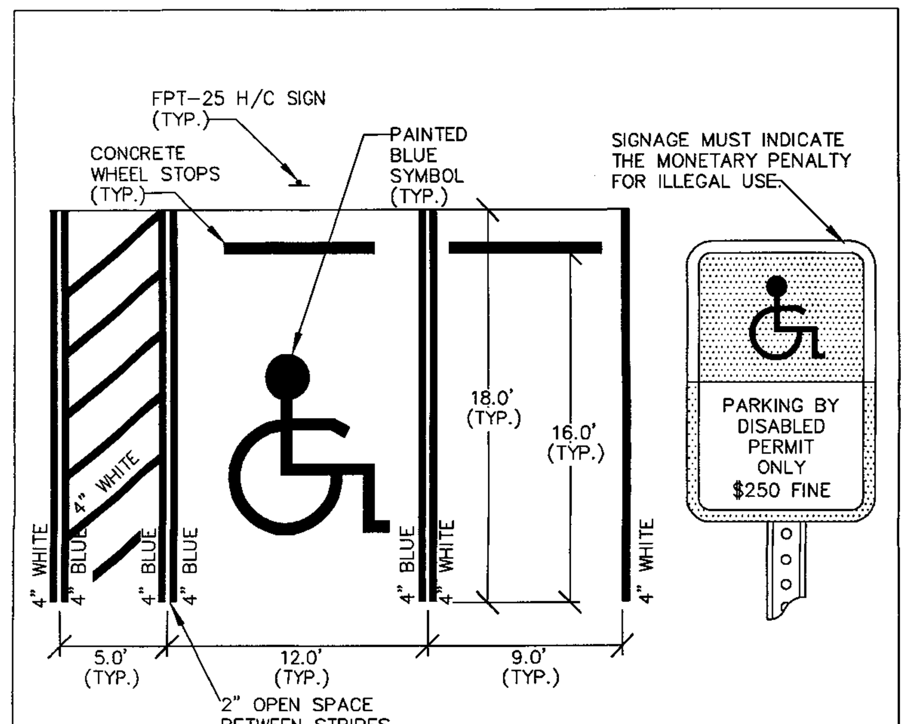

TYPICAL PARKING & STRIPING DETAIL
NOT TO SCALE

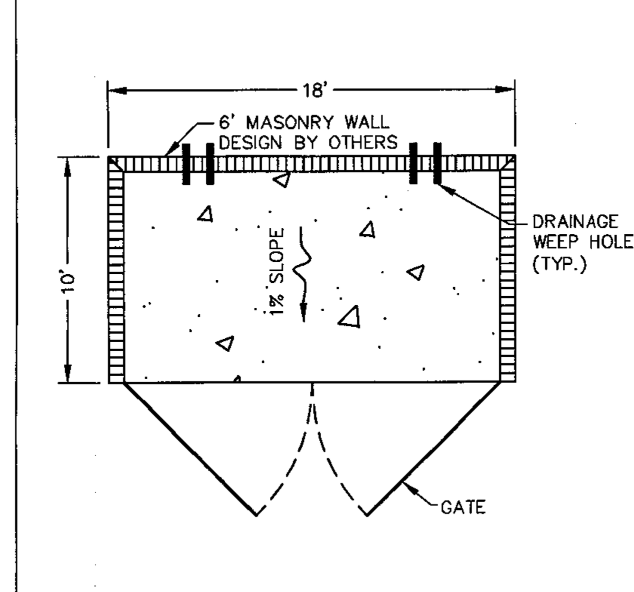

DUMPSTER ENCLOSURE DETAIL
NOT TO SCALE

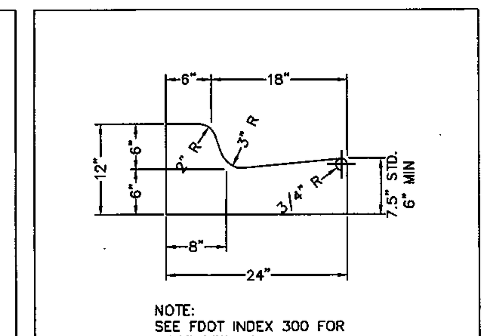

TYPE F CURB DETAIL
NOT TO SCALE

STRUCTURE SCHEDULE

NAME	TYPE	GRATE EL.	INVERT ELEVATION
S1	12" ADS	16.4'	14.5'
S2	12" ADS	16.8'	14.5'

RECEIVED
JUL 09 2013
COMMUNITY DEVELOPMENT

SFWMD AREAS

AREA BREAKDOWN FOR PHASE 2	
TOTAL AREA	10.09 ACRES
BUILDING AREA	2.57 ACRES 25.47%
IMPERVIOUS AREA	3.43 ACRES 34.00%
PERVIOUS AREA	3.79 ACRES 37.56%
LAKE AREA	0.30 ACRES 2.97%
% LOT COVERAGE	59.5%

SITE DATA (LAND USE)

AREA=10.00 ACRES 435,688 S.F.

	TOTAL PERVIOUS	DETENTION BOTTOM	TOTAL IMPERVIOUS	LAKE	PAVEMENT	BUILDING ROOF
EXISTING	439,587 S.F. 9.70 AC.	0.00 S.F. 0.00 AC.	0.00 S.F. 0.00 AC.	13,246.0 S.F. 0.3 AC.	0.00 S.F. 0.00 AC.	0.00 S.F. 0.00 AC.
PROPOSED	118,659 S.F. 2.73 AC.	42,253 S.F. 0.97 AC.	274,776 S.F. 6.30 AC.	13,246.0 S.F. 0.3 AC.	149,387 S.F. 3.43 AC.	112,143 S.F. 2.57 AC.

DOS2009-00023

DATE	REVISIONS	CHKD BY	
6/6/2013	REVISED PER 2/20/2013 CHECKLIST	DDS	I.K.S
7/3/2013	REVISED CURB RAMP DETAILS PER DAN KIRKPATRICK.	DDS	I.K.S

BARBOT, STEUART & ASSOCIATES, INC.
CONSULTING ENGINEERS
13861 PLANTATION ROAD, SUITE 105 - FORT MYERS, FLORIDA 33912
PHONE: (239) 936-7353 FAX: (239) 936-5823 EMAIL: MAIN@BSAENGINEERING.NET
CERTIFICATE OF AUTHORIZATION NUMBER:5464

BSA

NOTES & DETAILS
LAKES OF ESTERO PHASE II
WILLIAM ROAD, ESTERO, FLORIDA 33928
STRAP #: 34 46 25 10 0000E.0000
S.P.#:

FILE: 6634_PGD_101812.DWG
DRAWN BY: JTA/DDS
DESIGNED BY: DDS
DATE: 1/28/13

PREPARED UNDER THE DIRECTION OF: IAN K. STEUART, P.E. FL. REG. #15796 — LICENSE No. PE 15796 — STATE OF FLORIDA — PROFESSIONAL ENGINEER

SHEET: C4

SCALE: AS NOTED
PROJECT NUMBER: 6634

LDC
JUL 12 2013
APPROVED

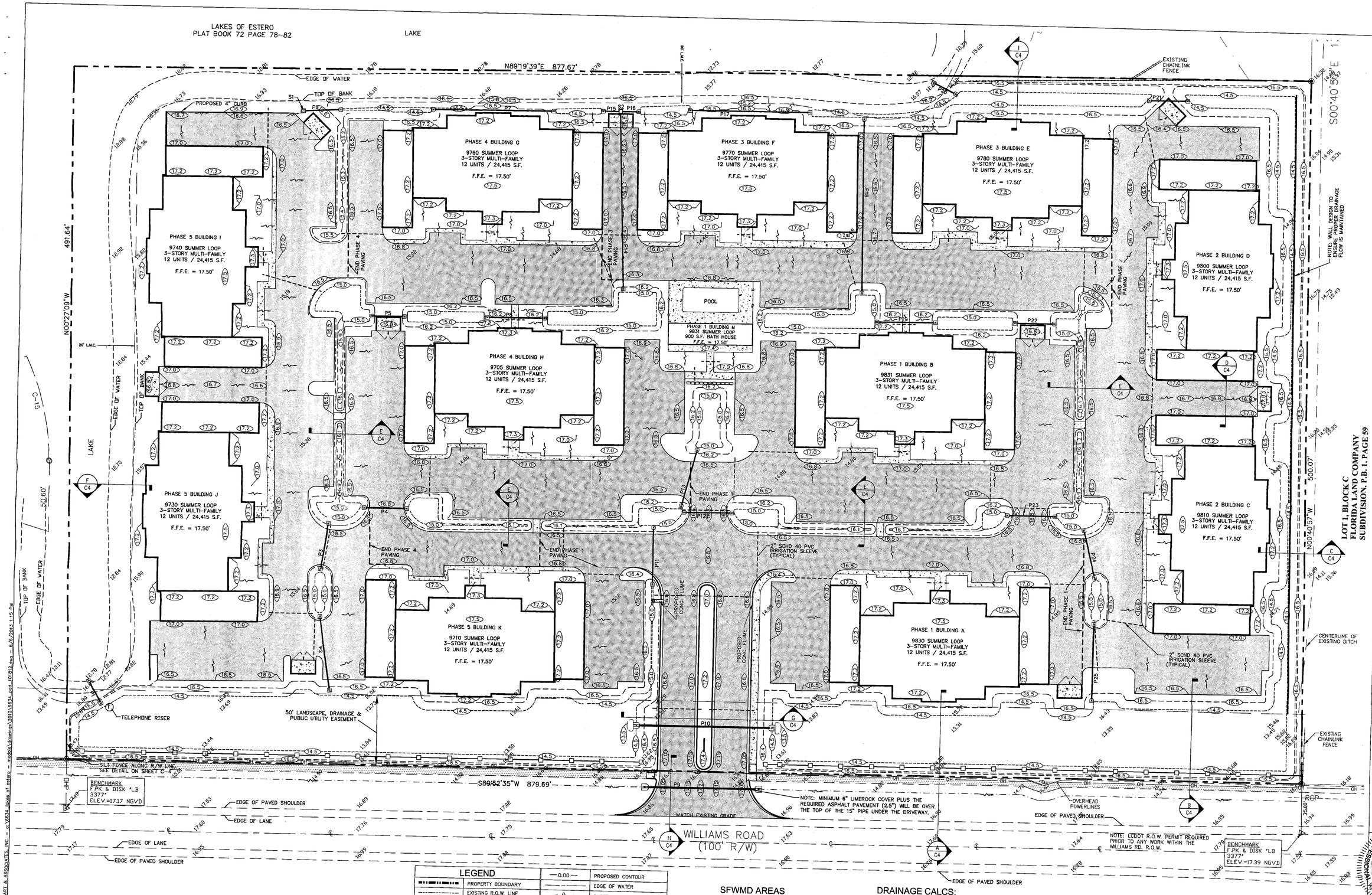

LEGEND

	PROPERTY BOUNDARY	—0.00—	PROPOSED CONTOUR
	EXISTING R.O.W. LINE		EDGE OF WATER
	EXISTING FEATURES		SHEET FLOW
	EXISTING CENTERLINE		TRADITIONAL RUNOFF
0.00	EXISTING ELEVATIONS		SWALE OR DITCH FLOW
(0.00)	PROPOSED ELEVATIONS		CULVERT W/MITRED ENDS
			CONTROL STRUCTURE

ALWAYS

SFWMD AREAS

AREA BREAKDOWN FOR PHASE 2	
TOTAL AREA	10.09 ACRES
BUILDING AREA	2.57 ACRES 25.47%
IMPERVIOUS AREA	3.43 ACRES 34.00%
PERVIOUS AREA	3.79 ACRES 37.56%
LAKE AREA	0.30 ACRES 2.97%
% LOT COVERAGE	59.5%

DRAINAGE CALCS:

1/2" INCH REQUIRED: TOTAL AREA(sf) * 1/24
439,587 * 1 / 24 = 18,316 CF.
RETENTION REQUIRED: 18,316 C.F. = 0.42 AC-FT.
RETENTION PROVIDED: 36,011 C.F. = 0.81 AC-FT.

EXISTING SFWMD PERMIT# 36-00917-S
MODIFICATION PERMIT HAS BEEN APPLIED FOR.
MAX. LOT COVERAGE PER GENERAL PERMIT IS 75.00%
THIS PHASE OF THE PROJECT IS PROPOSED @ 59.5%

SITE DATA (LAND USE)

AREA= 10.00 ACRES 435,888 S.F.

	TOTAL PERVIOUS	DETENTION BOTTOM	TOTAL IMPERVIOUS	LAKE	PAVEMENT	BUILDING ROOF
EXISTING	439,587 S.F. 9.70 AC.	0.00 S.F. 0.00 AC.	0.00 S.F. 0.00 AC.	13,246.0 S.F. 0.3 AC.	0.00 S.F. 0.00 AC.	0.00 S.F. 0.00 AC.
PROPOSED	118,659 S.F. 2.73 AC.	42,253 S.F. 0.97 AC.	274,776 S.F. 6.30 AC.	13,246.0 S.F. 0.3 AC.	149,387 S.F. 3.43 AC.	112,143 S.F. 2.57 AC.

REVISIONS	DATE	CHKD BY
REVISED PER 2/20/2013 CHECKLIST	6/6/2013	DDS | K.S

BARBOT, STEUART & ASSOCIATES, INC.
CONSULTING ENGINEERS
13961 PLANTATION ROAD, SUITE 105 - FORT MYERS, FLORIDA 33912
PHONE: (239) 936-2553 - FAX: (239) 936-5823 EMAIL: MAIN@BSAENGINEERING.NET
CERTIFICATE OF AUTHORIZATION NUMBER: 5464

DRAINAGE, PAVING & GRADING PLANS
LAKES OF ESTERO PHASE II
WILLIAM ROAD, ESTERO, FLORIDA 33928
SECTION 26, 24 SOUTH, RANGE 26 EAST
S.P.#:

FILE: 6634-PGD, 101812.DWG
DRAWN BY: JTA/DDS
DESIGNED BY: DDS
SCALE: 1" = 30
PROJECT NUMBER: 6634
DATE: 1/28/13
SHEET: C-5

PREPARED UNDER THE DIRECTION OF: KENNETH W. STEUART, P.E. STATE OF FLORIDA REG. #15798

LDC
JUL 12 2013
APPROVED

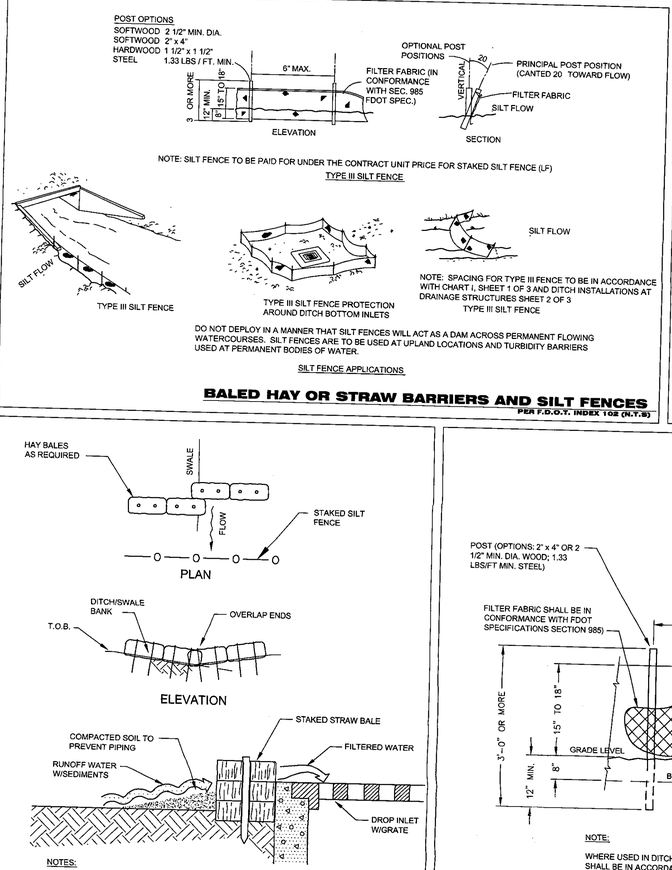

BALED HAY OR STRAW BARRIERS AND SILT FENCES
PER F.D.O.T. INDEX 102 (N.T.S)

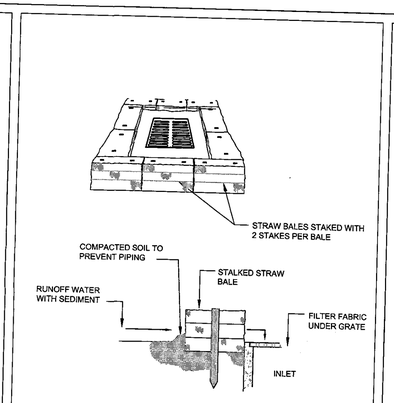

HAY BALE INLET SEDIMENT FILTER
NOT TO SCALE

NOTES:

1. HAY BALES SHALL BE TRENCHED 3" TO 4" AND STAKED WITH (2) 1"X2"X4' WOOD STAKES PER BALE.
2. SILT FENCE SHALL BE DOWN STREAM OF HAY BALES.
3. ADJACENT BALES SHALL BE BUTTED FIRMLY TOGETHER. UNAVOIDABLE GAPS SHALL BE PLUGGED WITH HAY OR STRAW TO PREVENT SILT FROM PASSING.

BALED HAY OR STRAW BARRIERS
NOT TO SCALE

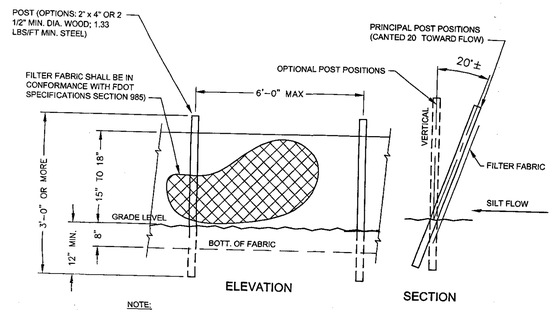

NOTE:

WHERE USED IN DITCHES, THE SPACING FOR TYPE III SILT FENCE SHALL BE IN ACCORDANCE WITH FDOT DESIGN STANDARDS, 2002, INDEX NO. 102, SHEET 1 OF 3, CHART NO. 1.

EROSION CONTROL DETAIL
NOT TO SCALE

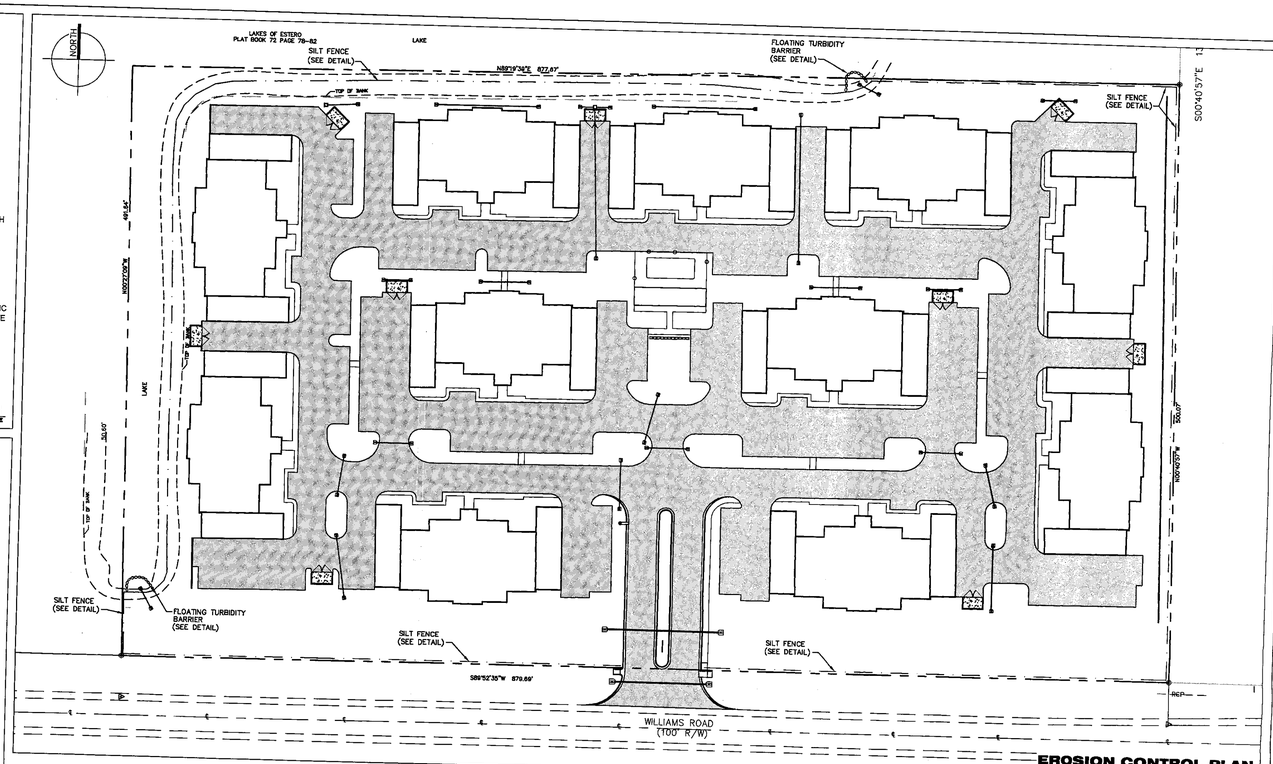

EROSION CONTROL PLAN
SCALE: 1" = 60'

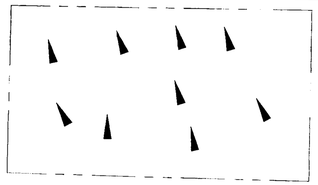

HISTORICAL RUNOFF
NOT TO SCALE

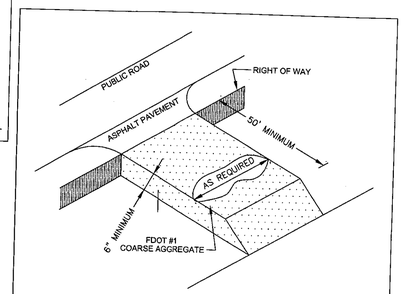

GRAVEL CONSTRUCTION ENTRANCE
NOT TO SCALE

STORM WATER POLLUTION PREVENTION NOTES:

1. PRIOR TO COMMENCEMENT OF CONSTRUCTION ACTIVITY APPROPRIATE EROSION CONTROL DEVICES SHALL BE INSTALLED TO CONTROL AND REDUCE SOIL EROSION AND SEDIMENT TRANSPORT TO OFF SITE CONSTRUCTION. ALL DEVICES SHALL REMAIN IN PLACE UNTIL PERMANENT EROSION CONTROL IS ESTABLISHED.
2. THE CONTRACTOR SHALL SUPPLEMENT THIS PLAN AS MAY BE REQUIRED TO CONTROL AND REDUCE SOIL EROSION BASED ON THE CONTRACTORS MEANS, METHODS AND TECHNIQUE OF CONSTRUCTION. THE CONTRACTOR SHALL ALSO FILE A NPDES NOTICE OF INTENT WITH THE EPA AND LEE COUNTY DEVELOPMENT SERVICE DIVISION AT LEAST 48 HOURS PRIOR TO THE START OF CONSTRUCTION.
3. THE CONTRACTOR SHALL CONTACT LEE COUNTY NPDES STORMWATER REVIEWER PRIOR TO ANY DEWATERING OPERATIONS.

NOTE: THESE DETAILS REPRESENT TYPICAL BEST MANAGEMENT PRACTICES FOR SOIL EROSION CONTROL. THEY MAY NOT SATISFY ALL REQUIREMENTS FOR COMPLIANCE WITH REGULATORY AGENCIES AND/OR SPECIFIC PERMIT CONDITIONS.

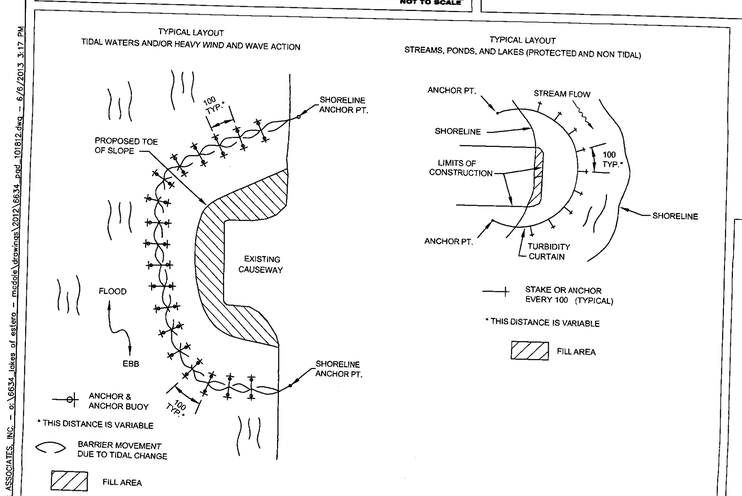

TYPICAL INSTALLATION LAYOUTS OF FLOATING TURBIDITY BARRIERS
NOT TO SCALE

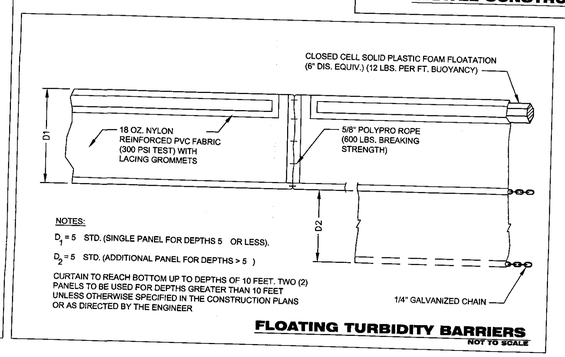

NOTES:

D_1 = 5 STD. (SINGLE PANEL FOR DEPTHS 5 OR LESS).

D_2 = 5 STD. (ADDITIONAL PANEL FOR DEPTHS > 5)

CURTAIN TO REACH BOTTOM UP TO DEPTHS OF 10 FEET. TWO (2) PANELS TO BE USED FOR DEPTHS GREATER THAN 10 FEET UNLESS OTHERWISE SPECIFIED IN THE CONSTRUCTION PLANS OR AS DIRECTED BY THE ENGINEER

FLOATING TURBIDITY BARRIERS
NOT TO SCALE

LEGEND			
	PROPERTY BOUNDARY	—0.00—	PROPOSED CONTOUR
	EXISTING R.O.W. LINE		EDGE OF WATER
	EXISTING FEATURES		SHEET FLOW
	EXISTING CENTERLINE		TRADITIONAL RUNOFF
0.00	EXISTING ELEVATIONS		SWALE OR DITCH FLOW
(0.00)	PROPOSED ELEVATIONS		CULVERT W/MITRED ENDS
			CONTROL STRUCTURE

SITE DATA (LAND USE)

AREA= 10.00 ACRES 435,888 S.F.

	TOTAL PERVIOUS	DETENTION BOTTOM	TOTAL IMPERVIOUS	LAKE	PAVEMENT	BUILDING ROOF
EXISTING	439,587 S.F. 9.70 AC.	0.00 S.F. 0.00 AC.	0.00 S.F. 0.00 AC.	13,246.0 S.F. 0.3 AC.	0.00 S.F. 0.00 AC.	0.00 S.F. 0.00 AC.
PROPOSED	118,653 S.F. 2.72 AC.	42,253 S.F. 0.97 AC.	274,776 S.F. 6.30 AC.	13,246.0 S.F. 0.3 AC.	149,387 S.F. 3.43 AC.	112,143 S.F. 2.57 AC.

DATE	REVISIONS	CHKD BY
6/6/2013	REVISED PER 2/20/2013 CHECKLIST	DDS | K.S

BARBOT, STEUART & ASSOCIATES, INC.
CONSULTING ENGINEERS
13961 PLANTATION ROAD, SUITE 105 · FORT MYERS, FLORIDA 33912
PHONE: (239) 936-7353 FAX: (239) 936-5823 EMAIL: MAIN@BSAENGINEERING.NET
CERTIFICATE OF AUTHORIZATION NUMBER:5464

EROSION CONTROL & POLLUTION PREVENTION PLAN

LAKES OF ESTERO PHASE II

WILLIAMS ROAD · ESTERO, FLORIDA 33928
STRAP # 34-46-25-B2-00000.0000
S.P.#:

FILE: 6634_PSD_03812.DWG

DRAWN BY: JTACOS

DESIGNED BY: DDS

DATE: 1/28/13

SCALE: AS NOTED

PROJECT NUMBER: 6634

SHEET NUMBER: C6

PROFESSIONAL ENGINEER · STATE OF FLORIDA · NO. 56957 · JAMES T. STEUART, P.E. · FL. REG. #15706

PREPARED UNDER THE DIRECTION OF:

LDC

JUL 12 2013

APPROVED

© BARBOT, STEUART & ASSOCIATES, INC. – G:\6634_lakes of estero – middle\dwgs\2012\6634_psd_10812.dwg – 6/6/2013 3:17 PM

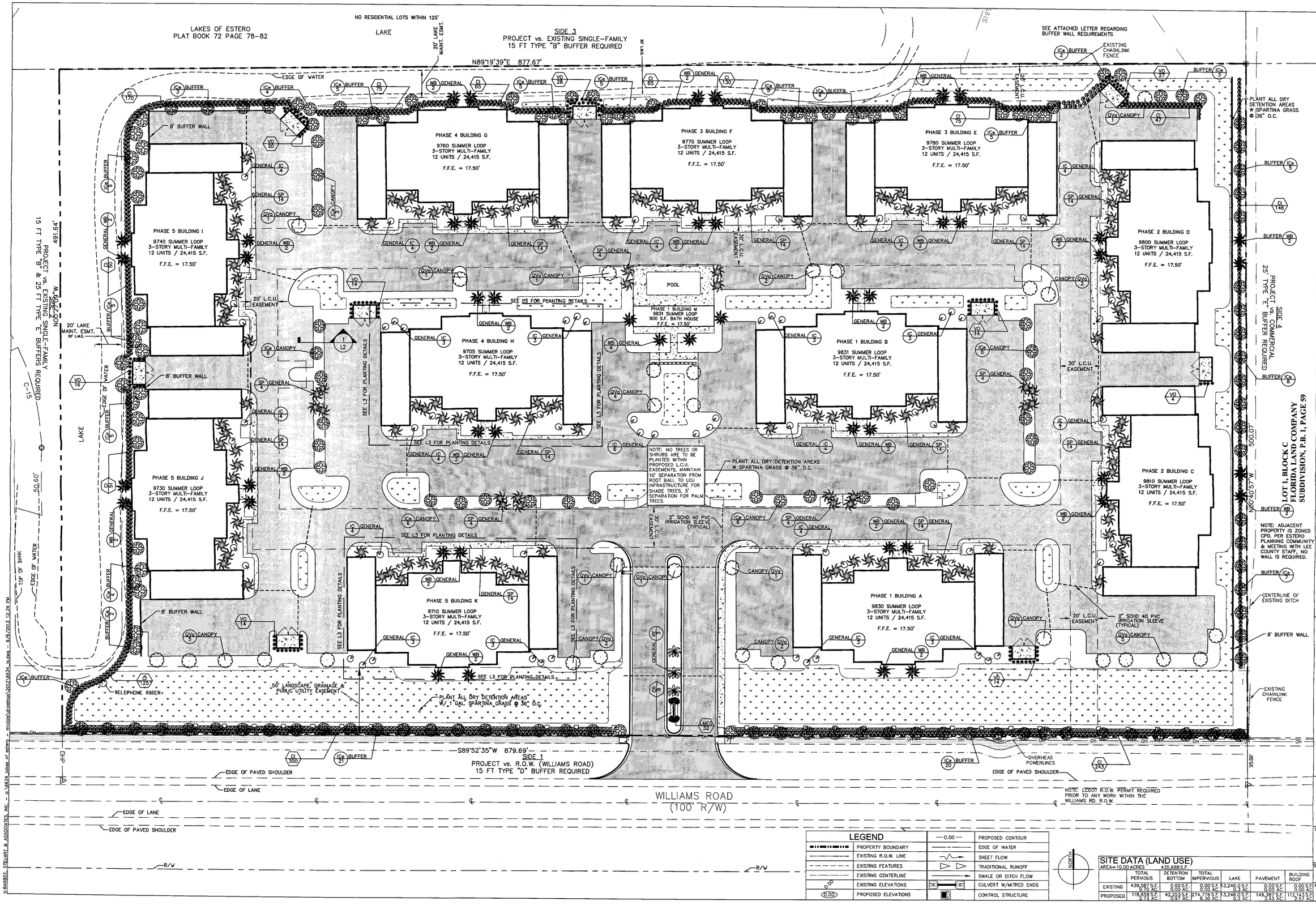

LEGEND			
	PROPERTY BOUNDARY	—0.00—	PROPOSED CONTOUR
	EXISTING R.O.W. LINE		EDGE OF WATER
	EXISTING FEATURES		SHEET FLOW
	EXISTING CENTERLINE		TRADITIONAL RUNOFF
0.00	EXISTING ELEVATIONS		SWALE OR DITCH FLOW
(0.00)	PROPOSED ELEVATIONS		CULVERT W/MITRED ENDS
			CONTROL STRUCTURE

NORTH

SITE DATA (LAND USE)

AREA= 10.00 ACRES 435,888 S.F.

	TOTAL PERVIOUS	DETENTION BOTTOM	TOTAL IMPERVIOUS	LAKE	PAVEMENT	BUILDING ROOF
EXISTING	439,587 S.F. 9.70 AC.	0.00 S.F. 0.00 AC.	0.00 S.F. 0.00 AC.	13,246.0 S.F. 0.3 AC.	0.00 S.F. 0.00 AC.	0.00 S.F. 0.00 AC.
PROPOSED	118,659 S.F. 2.73 AC.	42,253 S.F. 0.97 AC.	274,776 S.F. 6.30 AC.	13,246.0 S.F. 0.3 AC.	149,387 S.F. 3.43 AC.	112,143 S.F. 2.57 AC.

DATE	REVISIONS	CHKD BY
6/6/2013	REVISED PER 2/20/2013 CHECKLIST	DDS I.K.S

BARBOT, STEUART & ASSOCIATES, INC.
CONSULTING ENGINEERS
13861 PLANTATION ROAD, SUITE 105 · FORT MYERS, FLORIDA 33912
PHONE: (239) 936-7353 FAX: (239) 936-5923 EMAIL: MAIN@BSAENGINEERING.NET
CERTIFICATE OF AUTHORIZATION NUMBER-5464

LANDSCAPING & IRRIGATION PLANS
LAKES OF ESTERO PHASE II
WILLIAM ROAD, ESTERO, FLORIDA 33928
STRAP # 24-46-26-E3-00000.0000
S.P.#:

PREPARED UNDER THE DIRECTION OF:
STEVEN F. DELLECAVE
L.A., FL. REG. #1008

SHEET: L 1
SCALE: 1" = 30
PROJECT NUMBER: 6634
DATE: 1/28/13
DESIGNED BY: DDS
DRAWN BY: ADG/JJG
FILE: 6634_LS.DWG

LDC
JUL 12 2013
APPROVED

PLANT LIST: TREES & SHRUBS

QUANTITY	SYMBOL	BOTANICAL/COMMON NAME	LEGEND	SIZE @ PLANTING	ROOT TYPE	NOTES:	NATIVE EXOTIC
152	ICe	DAHOON HOLLY / ILEX CASSINE		4" CALIPER @ 12" ABOVE BASE 72" MIN. CANOPY, 12'-14' HGT	B & B	45 GALLON CONTAINER	N
74	IC	DAHOON HOLLY / ILEX CASSINE		2" CALIPER @ 12" ABOVE BASE 48" MIN. CANOPY, 12'-14' HGT	B & B	45 GALLON CONTAINER	N
30	QVa	LIVE OAK / QUERCUS VIRGINIANA		4" CALIPER @ 12" ABOVE BASE 72" MIN. CANOPY, 12'-14' HGT	B & B	45 GALLON CONTAINER	N
188	SP	CABBAGE PALM / SABAL PALMETTO		12' – 16' CLEAR TRUNK	B & B	50% CLEAR TRUNK 50% BOOTED TRUNK	N
48	WB	FOXTAIL PALM / WODYETIA BIFURCATA		10' – 12' CLEAR TRUNK	B & B		E
3	RE	FLORIDA ROYAL PALM / ROYSTONEA ELATA		14' – 18' CLEAR TRUNK	B & B		N
1,542	CI	COCOPLUM / CHRYSOBALANUS IACO		36" HIGH	POT	CONTINIOUS DOUBE ROW HEDGE 36" O.C., STAGGERED 18"	E
900	CR	DWF. CLUSIA / CLUSEA ROSEA		1 GALLON	POT		N
594	LMEG	LIRIOPE / LIRIOPE MUSARI E.G. GIANTS		1 GALLON	POT		E
4,608	SB	SPARTINA GRASS / SPARTINA BAKERI		1 GALLON	POT	36" O,C, THROUGHOUT DETENTION AREAS	N
81	VO	SWEET VIBURNUM / VIBURNUM ODORATISSIMUM		36" HIGH	POT		E
220	SB	SPARTINA GRASS / SPARTINA BAKERI		3 GALLON	POT		N
660	ZP	COONTIE / ZAMIA PUMILA		3 GALLON	POT	USE FOR ALL EXPOSURES	N
484	SAV	UMBRELLA PLANT / SCHEFFLERA ARBORICOLA VAR.		3 GALLON	POT	CONTINIOUS DOUBE ROW HEDGE 36" O.C., STAGGERED 18"	E
720	HN	DWARF FIREBUSH / HAMELIA NODOSA		1 GALLON	POT	USE FOR S. EXPOSURES FULL SUN	E
160	CC	JAMAICAN CAPER / CAPPARIS CYNPHALLOPHORA		1 GALLON	POT	USE FOR N. EXPOSURES PARTIAL SUN/SHADE	E
324	HC	SCARLET HIBISCUS / HIBISCUS COCCINEUS		3 GALLON	POT	USE FOR S. EXPOSURES FULL SUN	N
324	ICa	IXORA NORA GRANT / IXORA COCCINEA		3 GALLON	POT	USE FOR N. EXPOSURES PARTIAL SUN/SHADE	E
44	PR	PYGMY DATE PALM / PHOENIX ROEBELENII		4' – 5', TRIPLE TRUNK	POT		E

PROHIBITED INVASIVE EXOTICS

COMMON NAME	SCIENTIFIC NAME	COMMON NAME	SCIENTIFIC NAME
EARLEAF ACACIA	ACACIA AURICULIFORMIS	OLD WORLD CLIMBING FERN	LYGODIUM MICROPHYLLUM
WOMAN'S TOUNGE	ALBIZIA LEBBECK	MELALEUCA, PAPER TREE	MELALEUCA QUINQUENERVIA
BISHOPWOOD	BISCHOFIA JAVANICA	DOWNY ROSE MYRTLY	RHODOMYRTUS TOMENTOSUS
AUSTRALIAN PINES	ALL CASUARINA SPECIES	CHINESE TALLOW	SAPIUM SEBIFERUM
CARROTWOOD	CUPIANOPSIS ANACARDIOIDES	BRAZILIAN PEPPER, FL. HOLLY	SCHINUS TEREBINTHIFOLIUS
ROSEWOOD	DALBERGIA SISSOO	TROPICAL SODA APPLE	SOLANUM VIARUM
AIR POTATO	DIOSCOREA ALATA	JAVA PLUM	SYZYGIUM CUMINI
MURRAY RED GUM	EUCALYPTUS CAMALDULENSIS	ROSE APPLE	SYZYGIUM JAMBOS
WEEPING FIG	FICUS BENJAMINA	CORK TREE	THESPESIA POPULNEA
CUBAN LAUREL FIG	FICUS MICROCARPA	WEDELIA	WEDELIA TRILOBATA
JAPANESE CLIMBING FERN	LYGODIUM JAPONICUM		

NOTE: THE DEVELOPER SHALL MAINTAIN THE SITE FREE FROM ABOVE SPECIES IN PERPETUITY.

NOTE: HAND REMOVAL OF EXOTICS WITHIN DRIP LINE OF NATIVE TREES. MECHANICAL REMOVAL ELSEWHERE.

NOTE: PRIOR TO ANY SITE WORK, A VEGETATION REMOVAL PERMIT MUST BE OBTAINED FORM ES STAFF @ 239-479-8389

NOTE: NO DETERMINATION HAS BEEN MADE AS TO THE PRESENCE OF EXOTIC VEGETATION ON THIS SITE.

BUFFER REQUIREMENTS:

PROJECT ZONED: PUD

SIDE 1: PROJECT vs. R.O.W. (WILLIAMS ROAD)
15 FT. TYPE "D" BUFFER REQUIRED

5 TREES PER 100 L.F.
813.69 / 100 x 5 = 41 TREES

HEDGE REQUIRED FOR 813.69 L.F.
HEDGE TO BE DOUBLE ROW PLANTED 36" O.C. STAGGERED 18"
813.69 L.F. / 3 x 2 ROWS = 543 SHRUBS

SIDE 2: PROJECT vs. EXISTING SINGLE-FAMILY
15 FT. TYPE "B" BUFFER REQUIRED FOR 461.64 L.F.
5 TREES PER 100 L.F.
461.64 / 100 x 5 = 23 TREES

HEDGE REQUIRED FOR 491.64 L.F.
HEDGE TO BE DOUBLE ROW PLANTED 36" O.C. STAGGERED 18"
461.64 L.F. / 3 x 2 ROWS = 307 SHRUBS

SIDE 3: PROJECT vs. EXISTING SINGLE-FAMILY
15 FT. TYPE "B" BUFFER REQUIRED FOR 819 L.F. (877.67 L.F.-25' SIDE 4 BUFFER – 33.67' LAKE)
5 TREES PER 100 L.F.
819 / 100 x 5 = 41 TREES

HEDGE REQUIRED FOR 877.7 L.F.
HEDGE TO BE DOUBLE ROW PLANTED 36" O.C. STAGGERED 18"
819 L.F. / 3 x 2 ROWS = 546 SHRUBS

SIDE 4: PROJECT vs. COMMERCIAL
25 FT. TYPE "E" BUFFER REQUIRED FOR 485 L.F. (500 L.F.-15' SIDE 1 BUFFER)
5 TREES PER 100 L.F.
485 / 100 x 5 = 24 TREES

30 SHRUBS PER 100 L.F.
485 L.F. / 100 x 30 ROWS = 146 SHRUBS

CANOPY CALCS:

PAVED VEHICLE USE AREA x 0.1 / 250 = # OF TREES REQ.
143,564.6 S.F. PAVED VEHICLE USE AREA
35,875 S.F. x 0.1 / 250 = 57 TREES REQUIRED
TREES REQUIRED: 57 TREES
TREES PROVIDED: 57 TREES

INTERNAL LANDSCAPING CALC:

10% INTERNAL LANDSCAPE AREA CALC.
S.F. VEHICLE USE AREA x 0.1 = S.F. INTERNAL L.S. AREA REQ
143,565 S.F. x 0.1 = 14,356.5 SF
TOTAL INTERNAL L.S. AREA REQUIRED: 14,356.5 SF
TOTAL INTERNAL L.S. AREA PROVIDED: 18,857 S.F.
INTERNAL L.S. SHOWN AS HATCHED AREA:

OPEN SPACE CALC:

OPEN SPACE REQUIRED BASED ON PROJECT ZONING:
SMALL MULTI-FAMILY: 35%
LARGE MULTI-FAMILY: 40%
MULTI-FAMILY: 40%
PROJECT ZONED: PUD
TOTAL AREA: 439,587 S.F.
TOTAL AREA x PERCENTAGE = OPEN SPACE AREA REQUIRED
439,587 S.F. x 40% = 175,835 S.F.
OPEN SPACE REQUIRED: 175,835 S.F. = 40%
OPEN SPACE PROVIDED: 176,624 S.F. = 40.5%

GENERAL TREE CALCS:

TREE CALCULATIONS BASED ON AREA
TOTAL AREA: 439,587 S.F.
TREES REQUIRED = AREA/3,000 S.F.
439,587 S.F. / 3,000 S.F. = 147 TREES
TOTAL TREE REQUIRED = 147 TREES
TOTAL TREE PROVIDED = 147 TREES

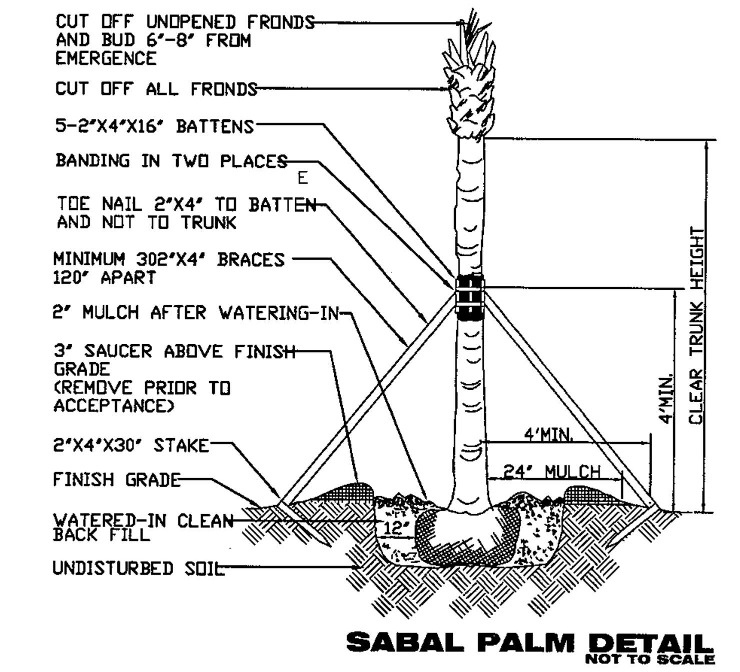

SABAL PALM DETAIL
NOT TO SCALE

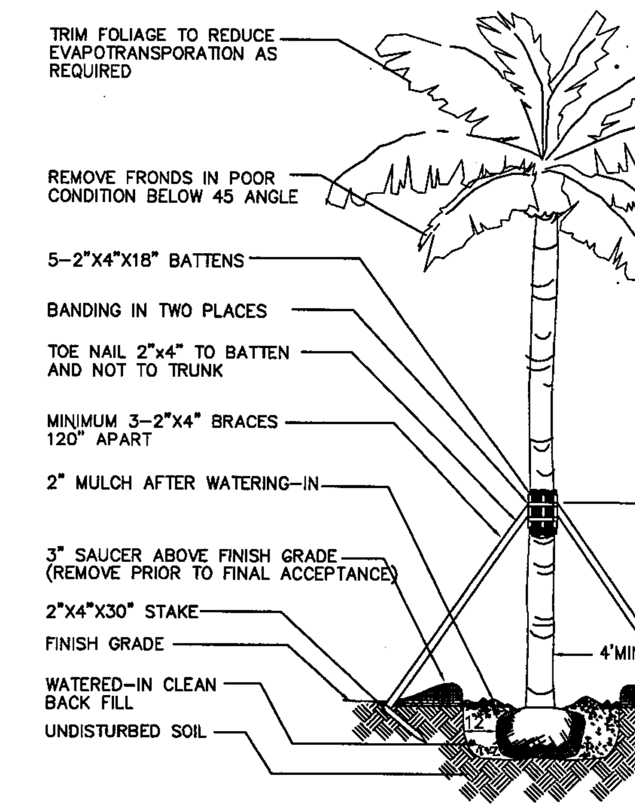

GENERAL PALM DETAIL
NOT TO SCALE

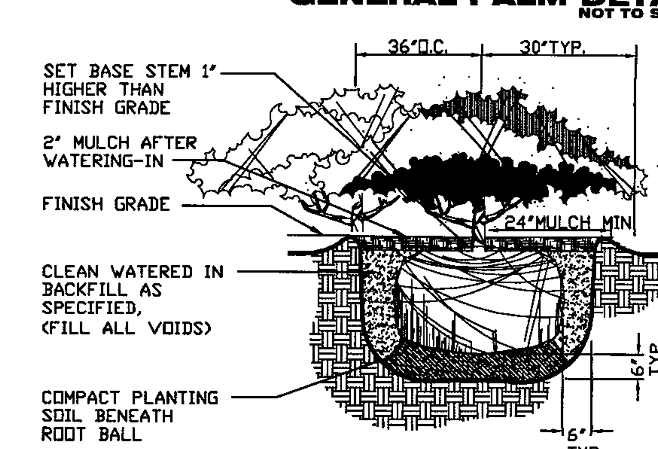

SHRUB PLANTING DETAIL
NOT TO SCALE

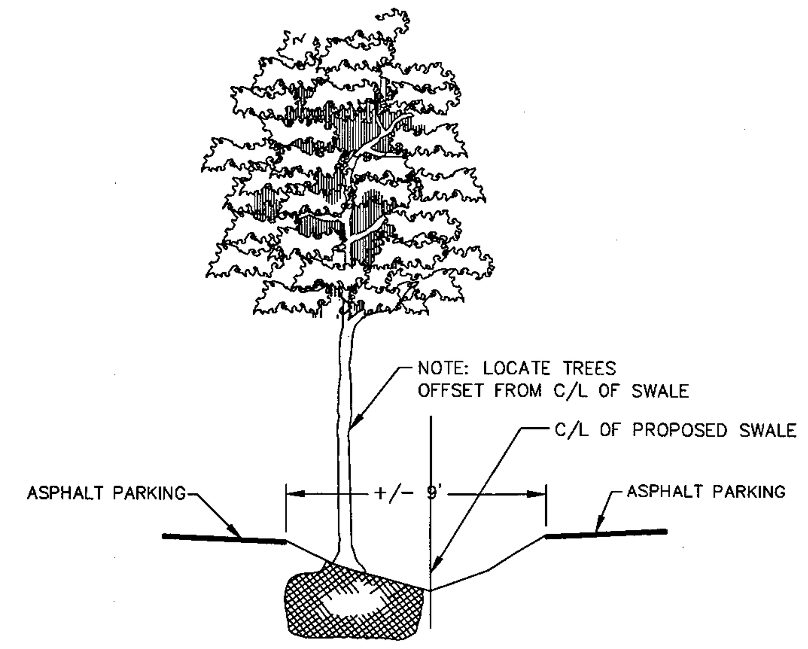

CROSS-SECTION 1 (1/L2)
NOT TO SCALE

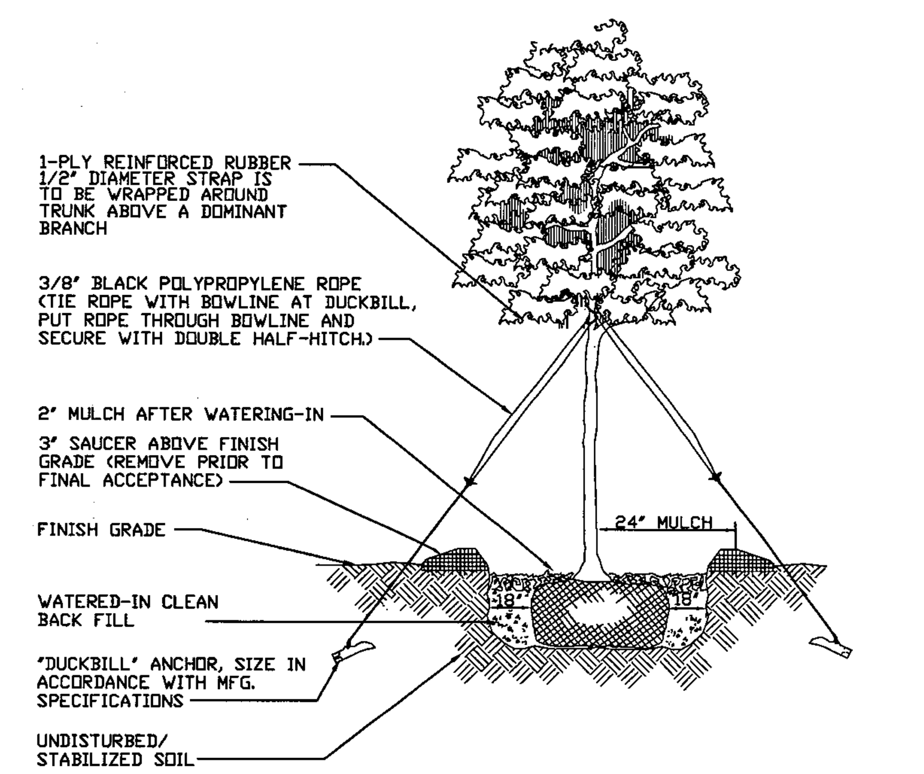

SINGLE TRUNK TREE 10'-20' OA HT.
NOT TO SCALE

LANDSCAPING NOTES:

1. PLANT MATERIAL USED TO MEET THE REQUIREMENTS OF THIS DIVISION MUST MEET THE STANDARDS FOR FLORIDA NO. 1 OR BETTER, AS SET OUT IN GRADES AND STANDARDS FOR NURSERY PLANTS, PARTS I AND II. DEPARTMENT OF AGRICULTURAL, STATE OF FLORIDA (AS AMENDED). ROOT BALL SIZES ON ALL TRANSPLANTED PLANT MATERIALS MUST ALSO MEET STATE STANDARDS
2. AT LEAST 75% OF TREES AND 50% OF THE SHRUBS USED TO FULFILL THESE REQUIREMENTS MUST BE NATIVE FLORIDA SPECIES.
3. FOR CODE-REQUIRED TREES, AT THE TIME OF INSTALLATION MUST BE A MINIMUM OF 10 FEET IN HEIGHT, HAVE A 2-INCH CALIPER (AT 12 INCHES ABOVE GROUND) AND A FOUR FOOT SPREAD. PALMS MUST HAVE A MINIMUM OF TEN FEET OF CLEAR TRUNK AT PLANTING. TREES HAVING AN AVERAGE MATURE SPREAD OR CROWN LESS THAN 20 FEET MAY BE SUBSTITUTED BY GROUPING THE SAME SO AS TO CREATE THE EQUIVALENT OF 20-FOOT CROWN SPREAD. TREES ADJACENT TO WALKWAYS, BIKE PATHS AND RIGHT-OF WAYS MUST BE MAINTAINED WITH 8' OF CLEAR TRUNK.
4. LARGER TREES SUBSTITUTED TO REDUCE THE MINIMUM NUMBER OF GENERAL TREES, W/O THE USE OF AN ALTERNATIVE LANDSCAPE BETTERMENT PLAN, MUST BE NO LESS THAN 4" IN DIAMETER AT 12" ABOVE THE GROUND AND NO LESS THAN 16' IN HEIGHT AT THE TIME OF PLANTING. THE GENERAL TREE REQUIREMENT CANNOT BE REDUCED IN NUMBER BY MORE THAN 50%
5. SHRUBS AND HEDGES: SHRUBS MUST BE A MINIMUM OF 24" IN HEIGHT ABOVE ONSITE ADJACENT PAVEMENT SURFACE REQUIRED TO BE BUFFERED AND/OR SCREENED WHEN MEASURED AT TIME OF PLANTING. THEY MUST BE A MINIMUM 3 GALLON CONTAINER SIZE AND BE SPACED 18 TO 36 INCHES ON CENTER. THE MUST BE AT LEAST 36" IN HEIGHT WITHIN 12 MONTHS OF TIME OF PLANTING AND BE MAINTAINED AT A HEIGHT OF NO LESS THAN 36" ABOVE THE ADJACENT PAVEMENT REQUIRED TO BE BUFFERED AND/OR SCREENED IN PERPETUITY, EXCEPT FOR VISIBILITY AT INTERSECTIONS AND WHERE PEDESTRIAN ACCESS IS PROVIDED. REQUIRED HEDGES MUST BE PLANTED IN DOUBLE STAGGERED ROWS AND MAINTAINED SO AS TO FORM A CONTINUOS, UNBROKEN, SOLID VISUAL SCREEN WITHIN A MINIMUM OF ONE YEAR AFTER TIME OF PLANTING.
6. MULCH REQUIREMENTS: A TWO-INCH MINIMUM LAYER, AFTER WATERING-IN, OF MULCH OR OTHER RECYCLED MATERIALS MUST BE PLACED AND MAINTAINED AROUND ALL NEWLY INSTALLED TREES, SHRUBS, AND GROUND COVER PLANTINGS. EACH TREE MUST HAVE A RING OF MULCH NO LESS THAN 24" BEYOND ITS TRUNK IN ALL DIRECTIONS. THE USE OF CYPRESS MULCH IS STRONGLY DISCOURAGED.
7. SITE SOILS ARE NOT SUBJECT TO SALT WATER INUNDATION OR FRESH WATER PONDING.
8. ALL INTERIOR LANDSCAPED AREAS NOT DEDICATED TO TREES OR TO PRESERVATION OF EXISTING VEGETATION MUST BE LANDSCAPED WITH GRASS, GROUND COVER, SHRUBS OR OTHER APPROVED LANDSCAPING MATERIALS, AND THIS MUST BE SO NOTED ON THE LANDSCAPE PLANS. SAND, GRAVEL, ROCK, SHELL OR PAVEMENT ARE NOT APPROPRIATE LANDSCAPE MATERIAL.
9. SOILS ON THIS SITE ARE CLASSIFIED :
   - #6 – HALLANDALE FINE SAND
   - #14 – VALKARIA FINE SAND
   - #26 – PINEDA FINE SAND
10. FLORIDA LAND USE COVER AND CLASSIFICATION NO. IS 134.
11. ALL ELEVATIONS BASED ON N.G.V.D. (1929).
12. THERE ARE NO EXCAVATIONS ON THIS SITE.
13. PLANTINGS SCHEDULE SHALL SPECIFY, WITH THE EXCEPTION OF EXISTING VEGETATION, 100% OF ALL REQUIRED TREES AND SHRUBS USED IN BUFFERS AND LANDSCAPING SHALL BE XERISCAPE VARIETIES AS DEFINED BY S.F.W.M.D.
14. DEVELOPMENT DOES NOT IMPACT WETLAND.
15. IF THE PARKING LOT IS TO BE USED AT NIGHT, ADEQUATE LIGHTING MUST BE PROVIDED FOR THE DRIVEWAYS, INGRESS AND EGRESS POINTS, AND PARKING AREAS OF ANY COMMERCIAL AND INDUSTRIAL AREAS. SUCH LIGHTING MUST BE SO ARRANGED AND DIRECTED AS TO ELIMINATE GLARE ON ANY OTHER USE. (34-2015(2)B).
16. ALL BUFFER AREAS AND LANDSCAPE STRIPS MUST BE MULCHED, SEEDED, SODDED OR PLANTED WITH GROUND COVER UNLESS VEGETATIVE COVER IS ESTABLISHED.
17. ALL LANDSCAPE AREAS MUST BE MULCHED UNLESS VEGETATION COVER IS ALREADY ESTABLISHED.
18. TREES ANDS SHRUBS USED IN BUFFERS MUST BE PLANTED IN MIN. WIDTH AREA EQUAL TO 1/2 REQUIRED WIDTH OF THE BUFFER. HOWEVER, IN NO CASE MAY THE PLANTING AREA BE LESS THAN 5' IN WIDTH.
19. ALL LANDSCAPE AREAS MUST BE PROVIDED FROM ENCROACHMENT BY ANY TYPE OF VEHICLE.
20. PRUNING: VEGETATION REQUIRED BY THIS CODE MAY ONLY BE PRUNED TO PROMOTE HEALTHY, UNIFORM, NATURAL GROWTH OF THE VEGETATION (EXCEPT WHERE NECESSARY TO PROMOTE HEALTH, SAFETY AND WELFARE) AND BE IN ACCORDANCE WITH "PRUNING STANDARDS (REVISED 1988) OF THE NATIONAL ARBORIST ASSOC.. TREES MUST NOT BE SEVERELY PRUNED TO PERMANENTLY MAINTAIN GROWTH AT A REDUCED HEIGHT OR SPREAD. PRUNING MUST NOT INTERFERE WITH THE DESIGN INTENT OF THE ORIGINAL INSTALLATION. SEVERELY PRUNED TREES MUST BE REPLACED BY THE PROPERTY OWNER. A PLANT'S GROWTH HABIT MUST BE CONSIDERED IN ADVANCE OF CONFLICTS WHICH MIGHT ARISE.
21. INSTALL ROOT BARRIER FOR ALL TREES ADJACENT TO PAVED AREAS
22. HEALTHY SABLE PALMS WITH A MIN. OF 8' CLEAR TRUNK MUST BE SALVAGED AND REUSED ON SITE PER LDC SEC. 10-416(c)(2)f&d

IRRIGATION REQUIREMENTS:

1. ALL LANDSCAPE AREAS, INCLUDING PARKING LOT ISLANDS, WILL BE ADEQUATELY SLEEVED FOR IRRIGATION. THIS MUST BE INDICATED ON THE PAVING/GRADING PLAN.
2. A MOISTURE (RAIN) SENSOR WILL BE INCLUDED IN THE IRRIGATION SYSTEM AND LOCATED ON THE SITE SO THAT IT WILL RECEIVE DIRECT RAINFALL, NOT IMPEDED BY OTHER OBJECTS.
3. THE IRRIGATION SYSTEM WILL BE DESIGNED TO ELIMINATE THE APPLICATION OF WATER TO IMPERVIOUS AREAS, INCLUDING ROADS, DRIVES AND OTHER VEHICLE USE AREAS.
4. THE IRRIGATION SYSTEM WILL BE DESIGNED TO AVOID IMPACTS ON EXISTING NATIVE VEGETATION THAT WILL BE RETAINED ON THE DEVELOPMENT SITE.
5. IRRIGATION OF BUFFER AND LANDSCAPING IS TO BE SUPPLIED BY OWNER VIA ON-SITE WELL BY: SPRINKLER SYSTEM
   NOTE: USE SLOW DRIP METHOD.
6. ALL NEW DEVELOPMENTS THAT HAVE REQUIRED LANDSCAPING MUST BE IRRIGATED BY THE USE OF AN AUTOMATIC SPRINKLER SYSTEM WITH CONTROLLER SET TO CONSERVE WATER. MOISTURE DETECTION DEVICES MUST BE INSTALLED ON ALL AUTOMATIC SPRINKLER SYSTEMS. TO OVERRIDE THE SPRINKLER ACTIVATION MECHANISM DURING PERIODS OF INCREASED RAINFALL. WHERE EXISTING IRRIGATION SYSTEMS ARE MODIFIED REQUIRING THE ACQUISITION OF A PERMIT, AUTOMATIC ACTIVATION SYSTEMS AND OVERRIDING MOISTURE DETECTION DEVICES MUST BE INSTALLED.

#134

EXISTING VEGETATION:
PINES(423),
CABBAGE PALM(428),
MELALEUCA (424),
BRAZILIAN PEPPER (422)

SITE F.L.U.C.C.
NOT TO SCALE

DATE	REVISIONS	CHKD BY

BSA
BARBOT, STEUART & ASSOCIATES, INC.
CONSULTING ENGINEERS
13861 PLANTATION ROAD, SUITE 105 - FORT MYERS, FLORIDA 33912
PHONE: (239) 936-7353 FAX: (239) 936-5823 EMAIL: MAIN@BSAENGINEERING.NET
CERTIFICATE OF AUTHORIZATION NUMBER:5464

LANDSCAPING & IRRIGATION PLANS
LAKES OF ESTERO PHASE II
WILLIAM ROAD, ESTERO, FLORIDA 33928
STRAP #: 34 46 25 10 0000E.0000
S.P.#:

DRAWN BY: ADS/JQS
FILE: 6634_LS.DWG
DESIGNED BY: DDS
DATE: 1/28/13

PREPARED UNDER THE DIRECTION OF:
STEVEN F. DELLECAVE
L.A., FL. REG. #1008
6/11/13

SHEET: L2
SCALE: N.T.S.
PROJECT NUMBER: 6634

LDC
JUL 12 2013
APPROVED

© BARBOT, STEUART & ASSOCIATES, INC. – o:\6634_lakes of estero – mcdole\drawings\2012\6634_ls.dwg – 6/6/2013 12:25 PM

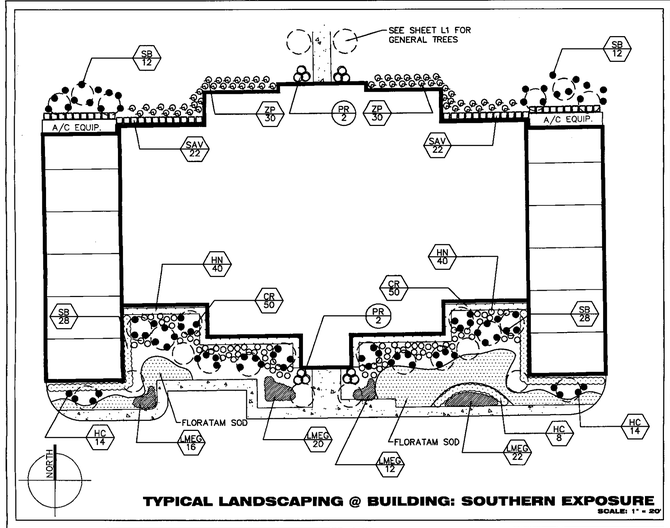

TYPICAL LANDSCAPING @ BUILDING: SOUTHERN EXPOSURE
SCALE: 1" = 20'

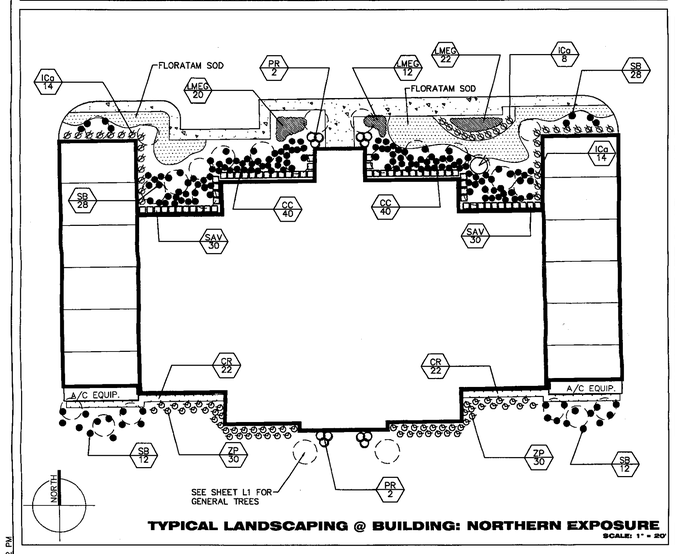

TYPICAL LANDSCAPING @ BUILDING: NORTHERN EXPOSURE
SCALE: 1" = 20'

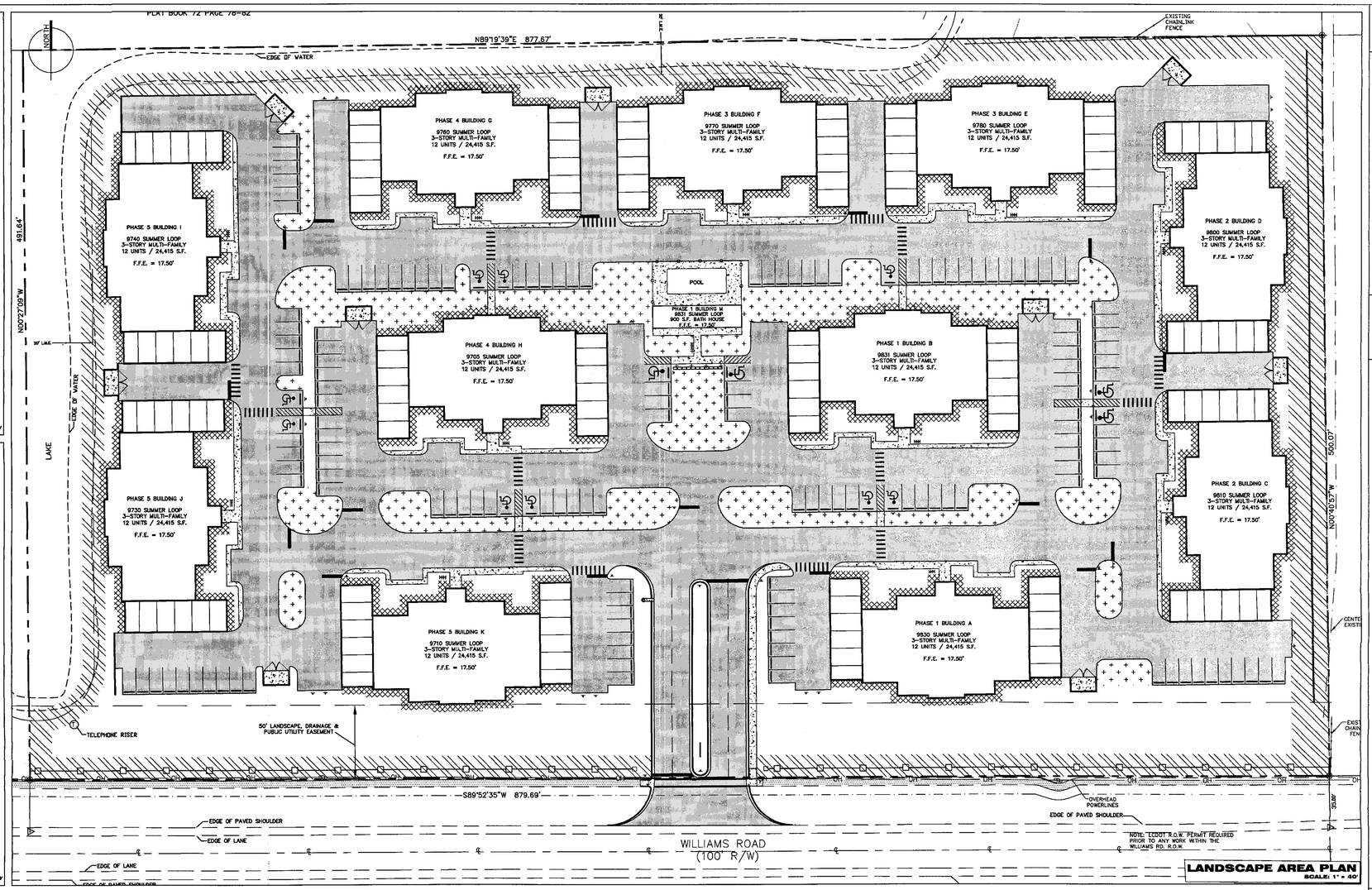

LANDSCAPE AREA PLAN
SCALE: 1" = 40'

OPEN SPACE

INTERNAL LANDSCAPING

BUILDING PERIMETER LANDSCAPE AREA

BUFFER LANDSCAPE AREA

PAVED AREA

DATE	REVISIONS	CHKD BY

BARBOT, STEUART & ASSOCIATES, INC.
CONSULTING ENGINEERS
13961 PLANTATION ROAD, SUITE 105 - FORT MYERS, FLORIDA 33912
PHONE: (239) 936-7353 FAX: (239) 936-5823 EMAIL: MAIN@BSAENGINEERING.NET
CERTIFICATE OF AUTHORIZATION NUMBER:5464

LANDSCAPING & IRRIGATION PLANS

LAKES OF ESTERO PHASE II
WILLIAM ROAD, ESTERO, FLORIDA 33928
STRAP #: 34-46-25 -B1-U0006.0000
S, T, R

FILE: 6634-L3.DWG
DRAWN BY: ADS/JCS
DESIGNED BY: DDS
DATE: 12/28/13

PREPARED UNDER THE DIRECTION OF:

STEVEN F. DELLECAVE
L.A., FL. REG. #1006

SHEET:
L3

SCALE:
AS NOTED

PROJECT NUMBER:
6634

LDC
JUL 12 2013
APPROVED

© BARBOT, STEUART & ASSOCIATES, INC. – o:\6534_lakes of estero – mcdole\drawings\2012\6634_ls.dwg – 6/6/2013 1:12 PM

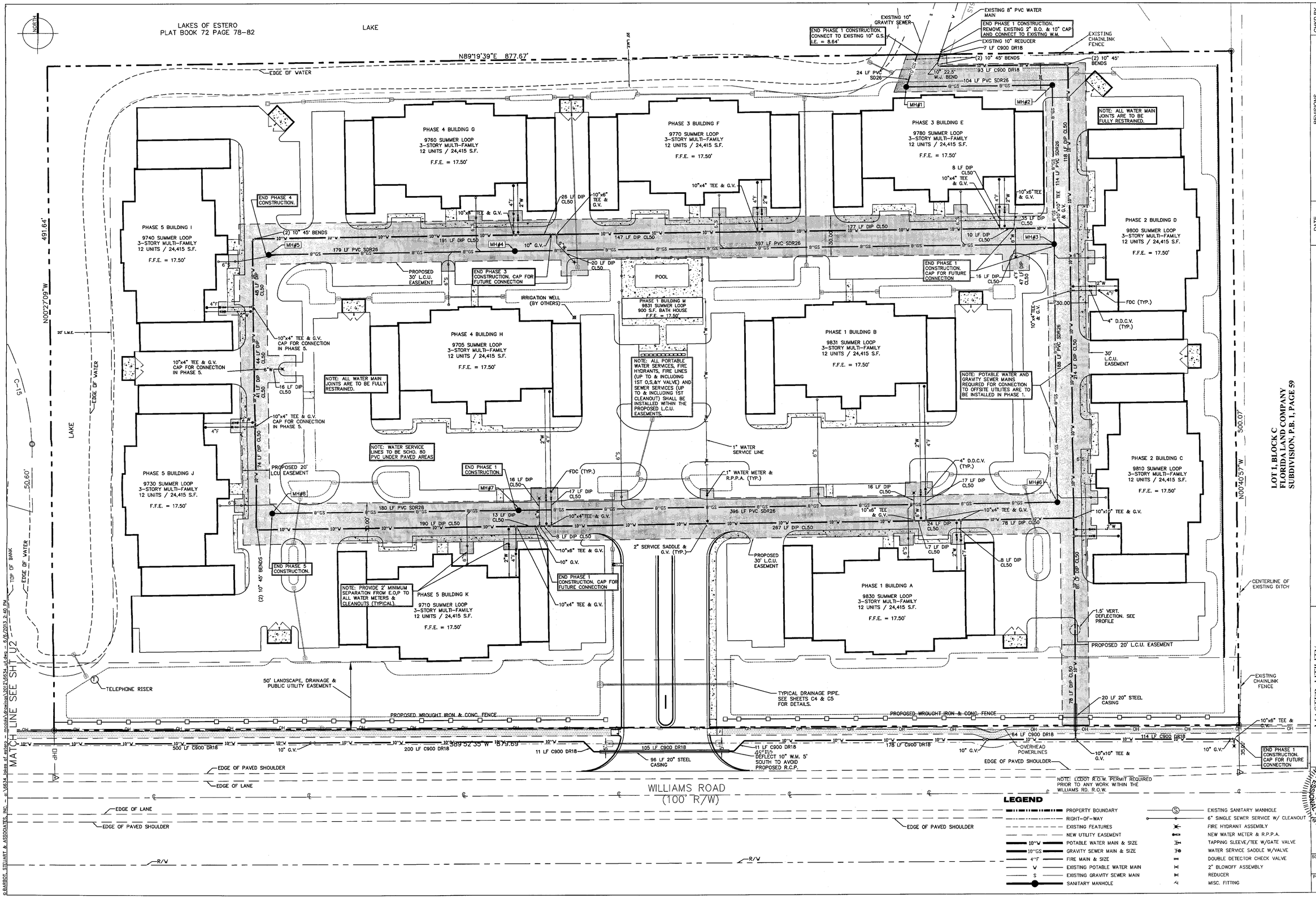

DATE	REVISIONS	CHKD BY
6/6/2013	REVISED PER 2/20/2013 CHECKLIST	DDS I.K.S

BARBOT, STEUART & ASSOCIATES, INC.
CONSULTING ENGINEERS
13961 PLANTATION ROAD, SUITE 105 FORT MYERS, FLORIDA 33912
PHONE (239) 936-7353 FAX: (239) 936-5823 EMAIL: MAIN@BSAENGINEERING.NET
LICENSE NUMBER: EB-0003448

MASTER UTILITY DISTRIBUTION PLAN
LAKES OF ESTERO PHASE II
WILLIAM ROAD, ESTERO, FLORIDA 33928
STRAP # 34 46 25 10 0000E.0000

DRAWN BY: JTA
DESIGNED BY: MS
DATE: 1/28/13
FILE: 6634_UT.DWG

REGISTERED UNDER THE DIRECTION OF
MARK STEUART, P.E.
FL REG. #15706
SHEET NUMBER
U1
SCALE: 1" = 30
PROJECT NUMBER: 6634

LDC
JUL 1 2 2013
APPROVED

© BARBOT, STEUART & ASSOCIATES, INC. – o:\6634_lakes of estero – mcoble\dcmirror\2012\6634_ut.dwg – 6/6/2013 2:40 PM

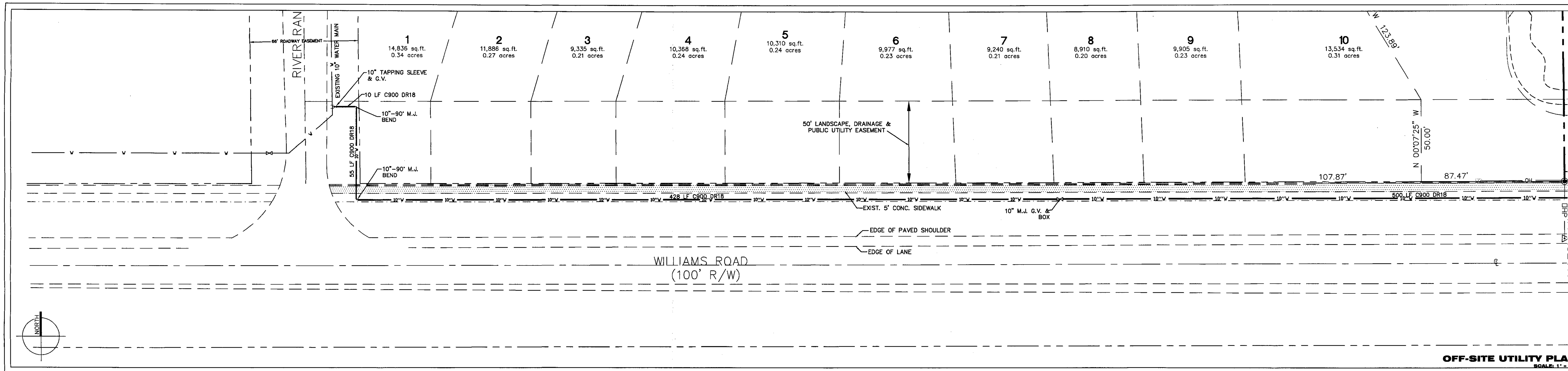

OFF-SITE UTILITY PLAN
SCALE: 1" = 30'

GENERAL UTILITY NOTES:

A. ALL WORK SHALL CONFORM TO LATEST REVISION OF THE LEE COUNTY UTILITIES OPERATIONAL MANUAL WHICH IS ON FILE AT THE DIVISION OF LEE COUNTY UTILITIES OFFICE (1500 MONROE STREET, P.O. BOX 398, FORT MYERS, FLORIDA 33902).

B. ANY QUANTITIES SHOWN ON PLANS ARE NOT VERIFIED BY LCU.

C. AT THE SITE KEEP AND MAINTAIN ONE RECORD COPY OF ALL CONTRACT DOCUMENTS, REFERENCE DOCUMENTS AND ALL TECHNICAL DOCUMENTS SUBMITTED IN GOOD ORDER. AS THE WORK PROGRESSES THE ENGINEER OR HIS DESIGNATED REPRESENTATIVE SHALL RECORD ON ONE SET OF REPRODUCIBLE DRAWINGS ALL CHANGES AND DEVIATIONS FROM THE ORIGINAL PLANS. HE SHALL RECORD THE EXACT LOCATION OF ALL CHANGES IN VERTICAL AND HORIZONTAL ALIGNMENT BY OFFSETS AND TIES AT EACH; SEWER, WATER, ELECTRIC, GAS, COMMUNICATION AND OTHER SERVICES BY OFF-SET DISTANCE TO PERMANENT IMPROVEMENTS SUCH AS BUILDING AND CURBS.

THESE RECORD DRAWINGS MUST BE CERTIFIED BY THE FLORIDA REGISTERED PROFESSIONAL ENGINEER, WHO PREPARED THE PLANS AND SIGNS AND SEALS THESE PLANS. THE RECORD DRAWINGS SHALL INCLUDE VERTICAL AND HORIZONTAL ALIGNMENT OF ALL WATER, SEWER, AND EFFLUENT REUSE LINES, VALVES, TEES, BENDS, REDUCERS, HYDRANTS, PUMP STATIONS, SERVICE CONNECTIONS, METER BOXES AND/OR PADS, AND OTHER PERTINENT STRUCTURES. PIPELINE RUNS IN EXCESS OF 152.4M, (500'), WITHOUT FITTINGS SHALL INCLUDE VERTICAL ALIGNMENT INFORMATION AT 152.4M, (500') INTERVALS. SAID ALIGNMENT SHALL BE TIED TO PERMANENT IMPROVEMENTS, SUCH AS ROADWAY AND/OR RAILROAD CENTERLINES AND RIGHTS-OF-WAY, BUILDING AND PROPERTY CORNERS, AND SHALL BE CERTIFIED BY A PROFESSIONAL LAND SURVEYOR, LICENSED IN THE STATE OF FLORIDA. THE PROFESSIONAL LAND SURVEYOR CAN COORDINATE WITH THE CONTRACTOR TO INSTALL THE NECESSARY APPURTENANCES ON BURIED UTILITIES TO FACILITATE THE SURVEY AFTER CONSTRUCTION IS COMPLETED. IN ADDITION, PROPERTY STRAP NUMBERS AND STREET NAMES SHALL BE SHOWN ON THE PLAN.

ON A CASE BY CASE BASIS, LEE COUNTY UTILITIES MAY WAIVE THE REQUIREMENT FOR CERTIFICATION BY A PROFESSIONAL LAND SURVEYOR, LICENSED IN THE STATE OF FLORIDA. HOWEVER, PRIOR CONSENT MUST FIRST BE OBTAINED FROM LEE COUNTY UTILITIES. THE COUNTY SHALL WITHHOLD FINAL ACCEPTANCE OF THE PROJECT UNTIL THE REQUIREMENT FOR RECORD DRAWINGS AND RELATED RECORDS HAS BEEN MET. RECORD DRAWINGS WITHOUT DETAILED FIELD VERIFIED HORIZONTAL AND VERTICAL LOCATIONS OF ALL FACILITIES SHOWN WILL BE REJECTED.

D. A PRE-CONSTRUCTION MEETING IS REQUIRED BEFORE WORK MAY BEGIN. LEE COUNTY UTILITIES SHALL BE NOTIFIED 48 HOURS PRIOR TO PROJECT MOBILIZATION.

E. ALL WORK AND MATERIALS, WHICH DO NOT CONFORM TO LCU SPECIFICATIONS, ARE SUBJECT TO REMOVAL AND REPLACEMENT AT THE CONTRACTOR'S EXPENSE.

F. ANY WORK PERFORMED WITHOUT THE KNOWLEDGE OF LCU IS SUBJECT TO RE-EXCAVATION, REMOVAL AND REPLACEMENT OF SAME TO BE DONE AT THE CONTRACTOR'S EXPENSE.

G. THE CONTRACTOR SHALL PROVIDE SUFFICIENT PERSONNEL AND EQUIPMENT ON THE JOB AT ALL TIMES DURING CONSTRUCTION TO SATISFY THE SPECIFICATIONS AND TO COMPLETE WORK.

H. LCU INSPECTION STAFF MAY OBSERVE PROJECT CONSTRUCTION.

I. THE CONTRACTOR IS TO UNCOVER ALL EXISTING LINES BEING TIED INTO AND VERIFY GRADES BEFORE BEGINNING CONSTRUCTION.

J. IT IS THE CONTRACTOR'S RESPONSIBILITY TO LOCATE AND TAKE ALL POSSIBLE PRECAUTIONS TO AVOID ANY DAMAGE TO ALL UNDERGROUND PIPELINES, TELEPHONE, CABLE TV, ELECTRIC LINES/CONDUITS AND STRUCTURES IN ADVANCE OF ANY CONSTRUCTION. LCU WILL NOT GUARANTEE ANY LOCATIONS AS SHOWN ON THESE PLANS OR THOSE OMITTED FROM THESE PLANS. THE CONTRACTOR SHALL BE FULLY RESPONSIBLE FOR ANY AND ALL DAMAGES WHICH MAY OCCUR BY HIS FAILURE TO EXACTLY LOCATE AND PROTECT EXISTING UTILITIES AND STRUCTURES.

K. CONTRACTOR SHALL VERIFY ALL QUANTITIES SHOWN ON THE PLANS. IF ANY DISCREPANCIES IN QUANTITIES ARE FOUND, THE CONTRACTOR SHALL NOTIFY THE PROJECT ENGINEER AND LCU.

L. ALL REGULATORY AND PERMITTING AGENCIES' REQUIREMENTS SHALL BE COMPLIED WITH.

M. APPROPRIATE TURBIDITY CONTROL DEVICES (E.G. SILT FENCES, HAY BAILS) WILL BE UTILIZED DURING ALL PHASES OF INSTALLATION AND GRADING. CONTRACTOR IS RESPONSIBLE FOR SUBMITTING THE NOTICE OF INTENT AND NOTICE OF TERMINATION TO THE EPA IN COMPLIANCE WITH LEE COUNTY'S NPDES PERMIT. CONTRACTOR IS RESPONSIBLE FOR DEVELOPING AND MAINTAINING AN EFFECTIVE STORM WATER POLLUTION PREVENTION PLAN.

N. IN THE EVENT THAT HARD LIMESTONE FORMATION IS ENCOUNTERED, MAKING IT IMPOSSIBLE TO EXCAVATE TO THE DEPTH REQUIRED UNDER THIS CONTRACT, THE CONTRACTOR MAY BE ALLOWED TO REDUCE THE PIPE COVER TO NOT LESS THAN TWO (2) FEET WHILE MAINTAINING THE LCU REQUIRED THICKNESS OF BEDDING UNDER THE PIPE. SUCH DEVIATION FROM THE PLANS MUST BE FIRST BE APPROVED BY LCU AND THE ENGINEER PRIOR TO THE PIPE LAYING. IF TWO FEET OF COVER OR MORE CANNOT BE ATTAINED, THE CONTRACTOR SHALL PROVIDE OTHER METHOD OF CONSTRUCTION OR PIPE PROTECTION WHICH SHALL FIRST BE APPROVED BY LCU AND THE ENGINEER, AT NO ADDITIONAL COST TO THE COUNTY.

O. LOCATIONS, ELEVATIONS, AND DIMENSIONS OF EXISTING UTILITIES, STRUCTURES AND OTHER FEATURES ARE SHOWN ACCORDING TO THE BEST INFORMATION AVAILABLE AT THE TIME OF PREPARATION OF THESE PLANS, BUT DO NOT PURPORT TO BE ABSOLUTELY CORRECT. PRIOR TO CONSTRUCTION, THE CONTRACTOR SHALL VERIFY AND BE FULLY RESPONSIBLE FOR ANY AND ALL DAMAGES WHICH MIGHT BE OCCASIONED BY HIS FAILURE TO EXACTLY LOCATE AND PRESERVE ANY AND ALL EXISTING UTILITIES, STRUCTURES, AND OTHER FEATURES AFFECTING HIS WORK. ANYTHING NOT SHOWN ON THESE DRAWINGS SHOULD BE BROUGHT TO THE ATTENTION OF THE ENGINEER AND SHALL NOT CONSTITUTE AN EXTRA, UNLESS APPROVED BY THE ENGINEER.

P. THE CONTRACTOR SHALL CONTACT THE ENGINEER AND LCU IMMEDIATELY CONCERNING ANY CONFLICTS WITH LCU UTILITIES/STRUCTURES ARISING DURING CONSTRUCTION OF ANY FACILITIES SHOWN ON THESE DRAWINGS.

Q. Q. TRAFFIC MUST BE MAINTAINED AT ALL TIMES AS PER LEE COUNTY DEPARTMENT OF TRANSPORTATION (LCDOT) AND PER FLORIDA DEPARTMENT OF TRANSPORTATION (FDOT) STANDARD SPECIFICATIONS FOR ROAD AND BRIDGE CONSTRUCTION, LATEST EDITION.

R. THE CONTRACTOR SHALL VERIFY ALL UTILITIES AND PROVIDE AT LEAST 48 HOURS NOTICE TO THE INDIVIDUAL UTILITY COMPANIES AND FDOT AND LCDOT PRIOR TO CONSTRUCTION.

S. THE CONTRACTOR SHALL REPLACE ALL PAVEMENT, CURBS, DRIVEWAYS, SIDEWALKS, FENCES, ETC., WITH THE SAME TYPE OF MATERIAL THAT WAS REMOVED DURING CONSTRUCTION OR AS DIRECTED BY THE ENGINEER. THE CONTRACTOR SHALL RESTORE ALL AREAS AFFECTED BY THE CONSTRUCTION TO ITS ORIGINAL CONDITION, OR BETTER.

T. WITHIN THE FDOT AND LCDOT RIGHT-OF-WAY, ALL DISTURBED AREAS SHALL RECEIVE GRASSING (SEEDING) OR SODDING MATERIALS IN ACCORDANCE WITH FDOT SPECIFICATIONS. THOSE AREAS THAT ARE CLASSIFIED AS DRAINAGE DITCHES SHALL RECEIVE FULL SOLID SOD.

U. THE INFORMATION PROVIDED IN THESE PLANS IS SOLELY TO ASSIST THE CONTRACTOR IN ASSESSING THE NATURE AND EXTENT OF CONDITIONS WHICH MAY BE ENCOUNTERED DURING THE COURSE OF WORK. ALL CONTRACTORS ARE DIRECTED, PRIOR TO BIDDING, TO CONDUCT WHATEVER INVESTIGATIONS THEY MAY DEEM NECESSARY TO ARRIVE AT THEIR OWN CONCLUSION REGARDING THE ACTUAL CONDITIONS THAT WILL BE ENCOUNTERED, AND UPON WHICH THEIR BIDS WILL BE BASED.

V. ALL FRAMES, COVERS VALVE BOXES, METER BOXES AND MANHOLES SHALL BE ADJUSTED TO FINISHED GRADE UPON COMPLETION OF PAVING OR RELATED CONSTRUCTION. ALL VALVE PADS SHALL BE POURED IN PLACE. NO PRE-FORMED VALVE PADS ALLOWED.

MANHOLE SCHEDULE

#	RIM	INVERT ELEVATIONS			
		N	S	E	W
MH#1	16.70'	8.70'	--	8.80'	--
MH#2	16.70'	--	9.32'	--	9.22'
MH#3	16.70'	9.78'	9.88'	--	9.88'
MH#4	16.70'	--	--	11.48'	11.58'
MH#5	16.70'	--	--	12.30'	--
MH#6	16.70'	10.63'	--	--	10.73'
MH#7	16.70'	--	--	12.33'	12.43'
MH#8	16.70'	--	--	13.16'	--

SPECIFIC UTILITY NOTES:

WATER SYSTEM:

1. HYDRANT ASSEMBLIES TO BE CONSTRUCTED PER STANDARD LCU DETAIL 9.14.
2. THE POTABLE WATER SERVICES AND ASSOCIATED BACKFLOW PREVENTION DEVICES ARE TO BE CONSTRUCTED PER LCU STANDARD DETAILS 9.10 & 9.11.
3. THE FIRE LINES AND ASSOCIATED BACKFLOW PREVENTION DEVICES ARE TO BE CONSTRUCTED PER LCU STANDARD DETAILS 9.13A AND 9.13B. FINAL DESIGN OF UNDERGROUND FIRE MAIN AND CONNECTIONS IS TO BE DETERMINED BY THE ENGINEER OF RECORD DESIGNING THE 61G15 FIRE PROTECTION DOCUMENTS.
4. PROVIDE FDC ON EACH FIRE LINE TO EACH BUILDING. COORDINATE WITH LOCAL FIRE DISTRICT FOR FINAL LOCATIONS.
5. PRESSURE TESTS TO BE WITNESSED BY THE ENGINEER OF RECORD AND LEE COUNTY UTILITIES.
6. BACTERIOLOGICAL TEST POINTS TO BE SELECTED BY H.R.S.
7. DUCTILE IRON PIPE WATER MAINS SHALL BE A MINIMUM OF CLASS 50, PRESSURE CLASS 250.
8. PVC WATER MAINS SHALL BE A MINIMUM OF C900 DR18, CLASS 150.

SEWER SYSTEM:

1. MANHOLE SHOP DRAWINGS TO BE REVIEWED AND APPROVED BY THE ENGINEER OF RECORD PRIOR TO CASTING.
2. VIDEO RECORD OF ALL SEWERS SHALL BE SUBMITTED TO LEE COUNTY UTILITIES AND THE ENGINEER OF RECORD.
3. THE ENGINEER OF RECORD SHALL WITNESS VIDEO RECORDING AND LOW PRESSURE TESTING OF ALL SEWERS.
4. GRAVITY SEWER MAINS SHALL BE A MINIMUM OF 8" PVC SDR26.

FIRE FLOW CALCS:

BF = 18 x C x √A
BF = 18 x 0.8 x 156.25
BF = 2,250 G.P.M.

FF = BF x MULTIPLIER
FF = 2,250 x 1.0
FF = 2,250 G.P.M.*

BF = 18 x C x √A

C = 1.0 (TYPE V)
C = 0.8 (TYPE III & IV)
C = 0.6 (TYPE I & II)

FF = BF x 1.00 (ORDINARY HAZARD)
FF = BF x 1.25 (HAZARD OCCUPANCY)

ACTUAL FIRE FLOW TESTED @ 20 P.S.I.: 740 G.P.M.
FIRE DISTRICT: ESTERO FIRE RESCUE
DATE TESTED: 09/02/2010
BY: SCOTT DANIELSON

*NOTE:
IF FIRE FLOW REQUIRED EXCEEDS AVAILABLE FIRE FLOW (FROM TEST) THEN A 50% REDUCTION IN THE REQUIRED FLOW WILL BE PERMITTED PROVIDED AN AUTOMATIC FIRE SPRINKLER SYSTEM IS INSTALLED. AN AUTOMATIC FIRE SPRINKLER SYSTEM IS PROPOSED TO BE INSTALLED.

*NOTE: PER MR. VAUGHN SPANGLER, ASST. FIRE MARSHAL WITH BONITA SPRING FIRE DEPT. THE WATER MAIN CONNECTIONS TO THE NORTH AND THE WEST SHALL BE IN PLACE WITH FIRE HYDRANTS INSTALLED AND OPERATIONAL BEFORE COMBUSTIBLES ARE ON SITE.

STANDARD DETAIL NO. 9.30
LEE COUNTY UTILITIES
MANHOLE FRAME COVER

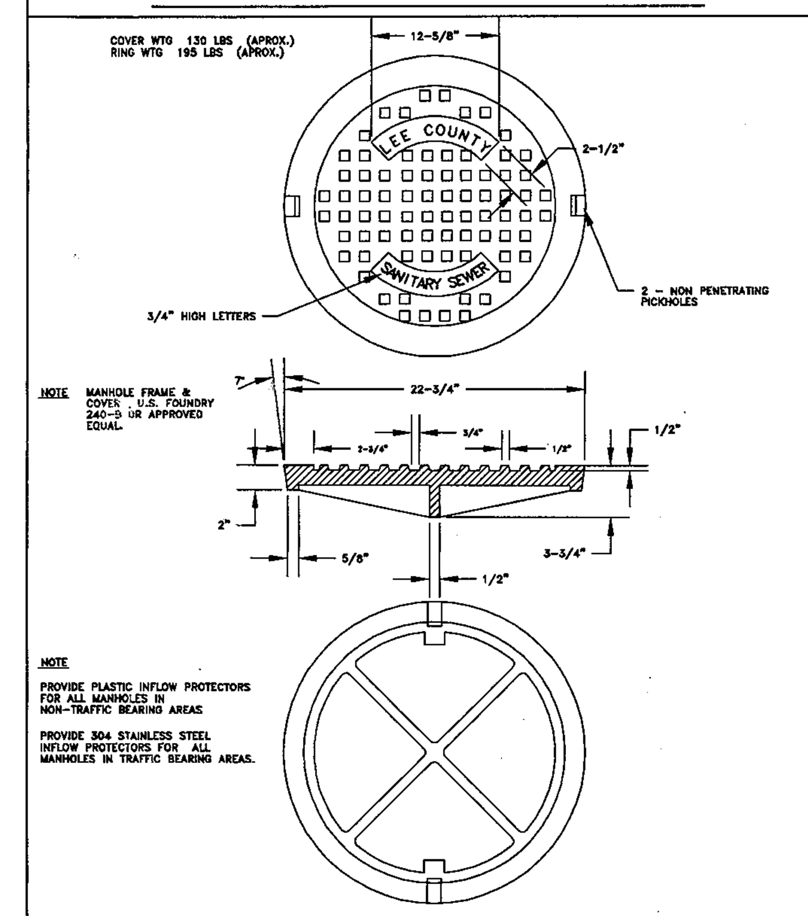

NTS
DATE: 02/22/00 S:\UTILS\ENGR\ACAD\DETAILS\30

STANDARD DETAIL NO. 9.31
LEE COUNTY UTILITIES
MANHOLE FRAME RING

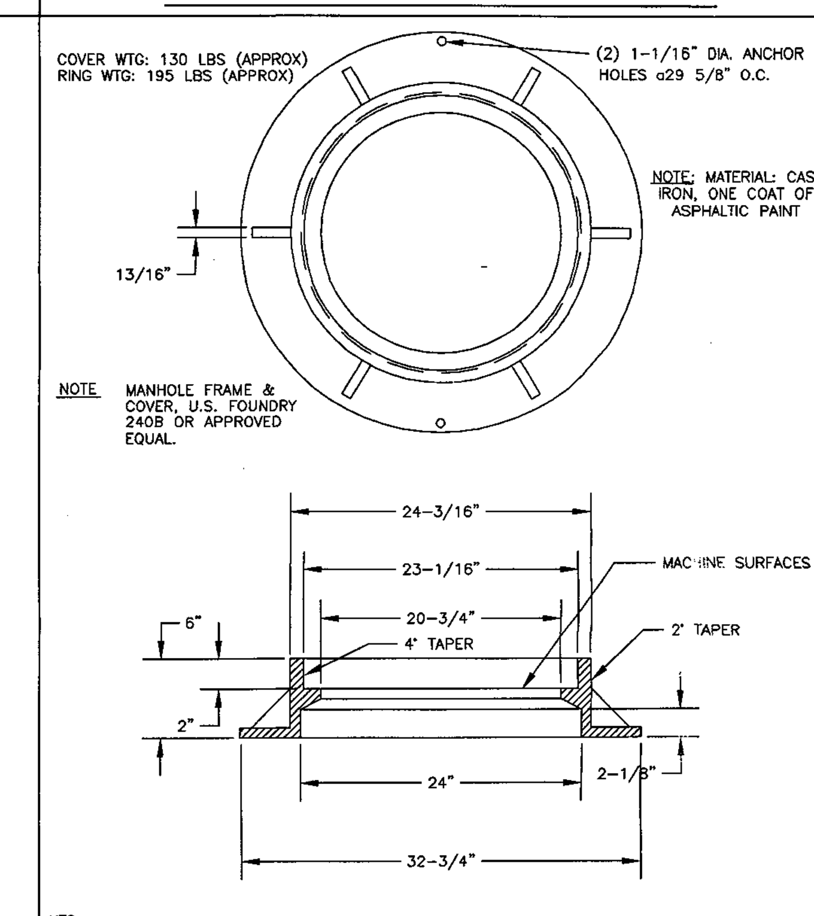

NTS
DATE: 02/22/00 H:\ENGR\ACAD\DETAILS\31

STANDARD DETAIL NO. 9.33
LEE COUNTY UTILITIES
PRECAST MANHOLE-CONCENTRIC

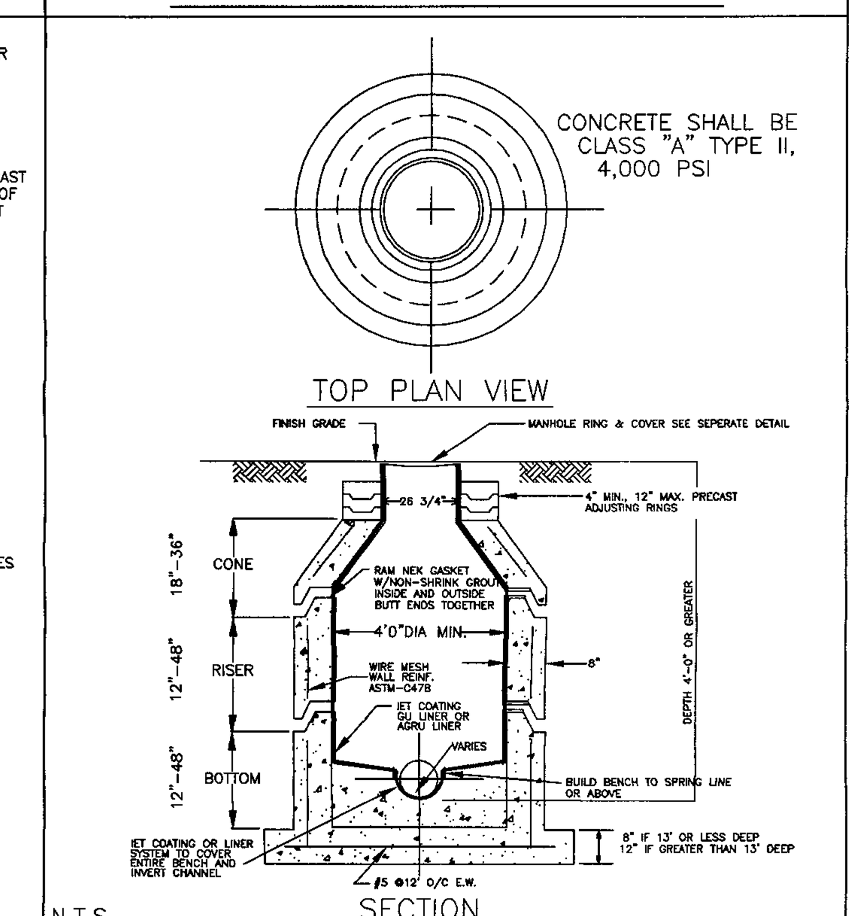

N.T.S.
DATE: 02/22/00 S:\UTILS\ENGR\ACAD\DETAILS\33

STANDARD DETAIL NO. 9.38
LEE COUNTY UTILITIES
STANDARD SEWER SERVICE LATERALS

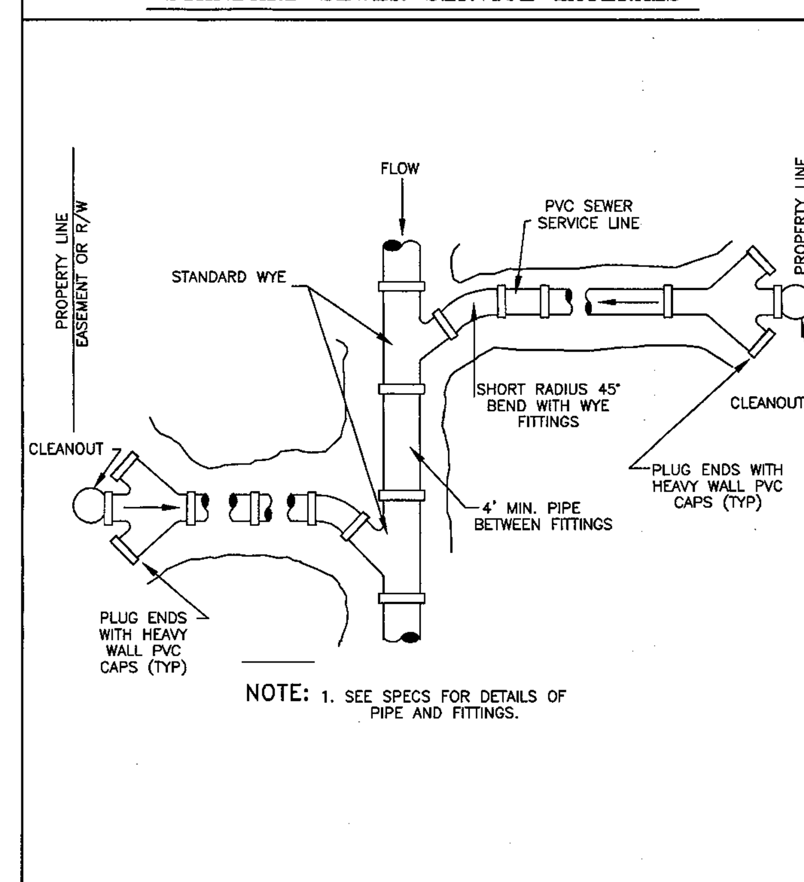

NOTE: 1. SEE SPECS FOR DETAILS OF PIPE AND FITTINGS.

NTS
DATE: 02/22/00 S:\UTILS\ENGR\ACAD\DETAILS\38

STANDARD DETAIL NO. 9.39
LEE COUNTY UTILITIES
STANDARD SEWER SERVICE LATERAL

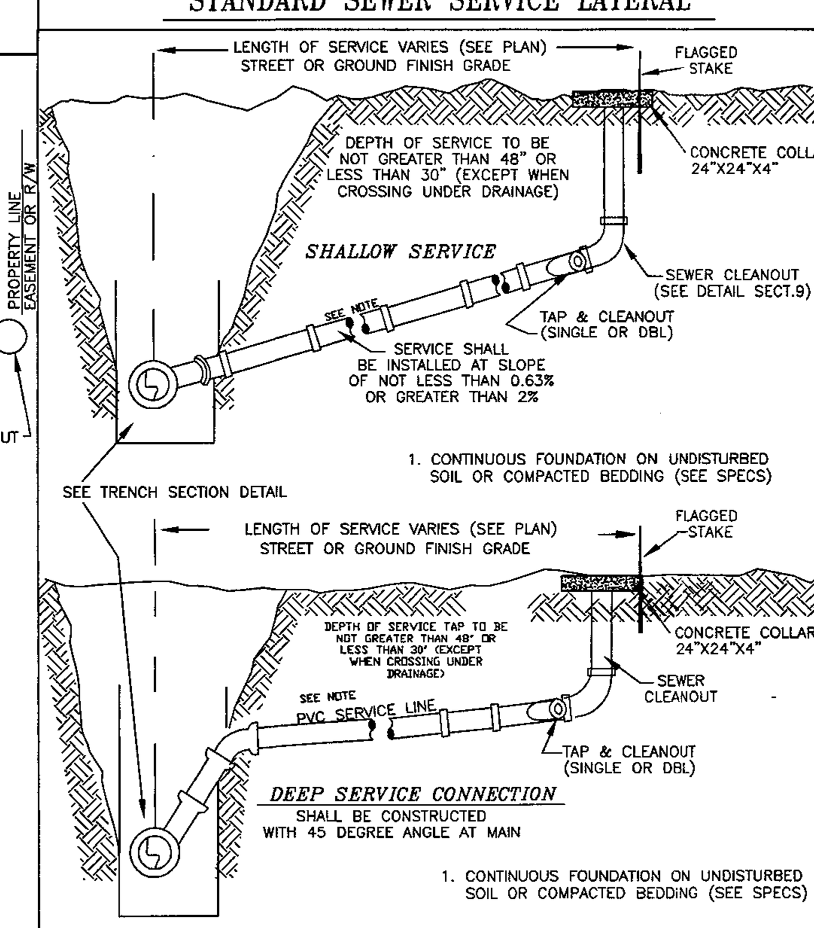

NTS
DATE: 02/22/00 S:\UTILS\ENGR\ACAD\DETAILS\39

STANDARD DETAIL NO. 9.40
LEE COUNTY UTILITIES
6" SEWER CLEAN-OUT DETAIL

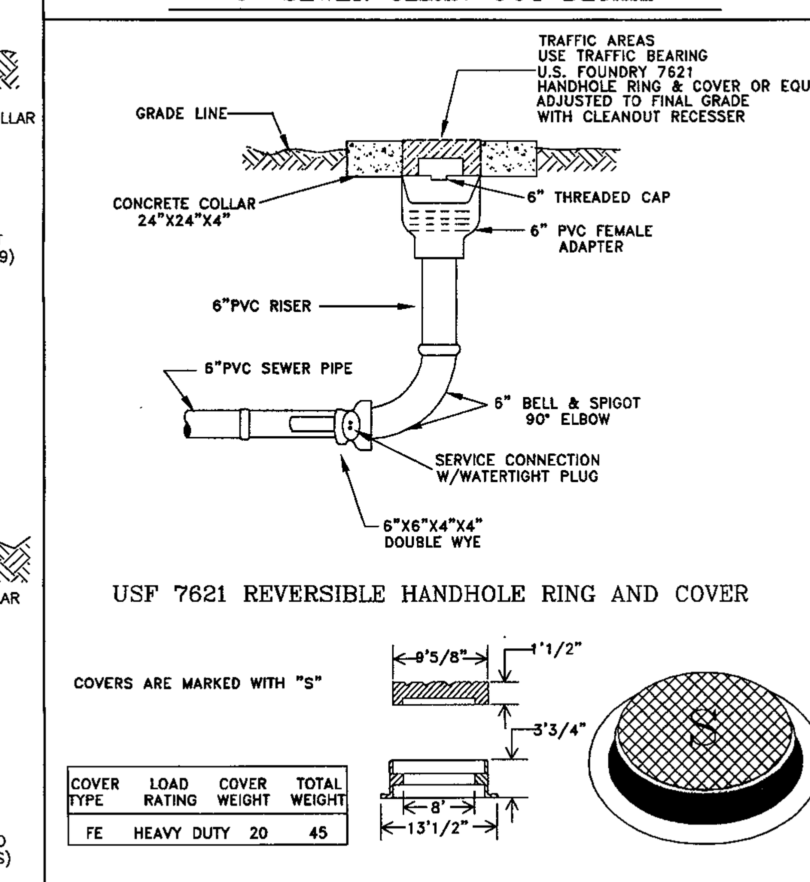

COVER TYPE	LOAD RATING	COVER WEIGHT	TOTAL WEIGHT
FE	HEAVY DUTY	20	45

NTS
DATE: 02/22/00 S:\UTILS\ENGR\ACAD\DETAILS\40

CHKD BY	REVISIONS	DATE

BARBOT, STEUART & ASSOCIATES, INC.
CONSULTING ENGINEERS
13861 PLANTATION ROAD, SUITE 105 - FORT MYERS, FLORIDA 33912
PHONE: (239) 936-7353 FAX: (239) 936-5823 EMAIL: MAIN@BSAENGINEERING.NET
LICENSE NUMBER: EB-000348

BSA

UTILITY PLANS & NOTES

LAKES OF ESTERO PHASE II
WILLIAM ROAD, ESTERO, FLORIDA 33928
STRAP #: 34 46 25 10 0000E.0000

FILE: 6634_UT.DWG
DRAWN BY: JTA
DESIGNED BY: IKS
DATE: 1/29/13

PREPARED UNDER THE DIRECTION OF:
ALAN K. STEUART, P.E.
FL. REG. #15796
PROFESSIONAL ENGINEER, STATE OF FLORIDA, LICENSE No. 15796
06-12-13

SHEET:
U2

SCALE:
AS NOTED

PROJECT NUMBER:
6634

LDC
JUL 12 2013
APPROVED

© BARBOT, STEUART & ASSOCIATES, INC. - o:\6634_lakes of estero - mcdole\drawings\2012\6634_ut.dwg - 6/6/2013 12:21 PM

STANDARD DETAIL NO. 9.1
LEE COUNTY UTILITIES
TAPPING SLEEVE AND VALVE

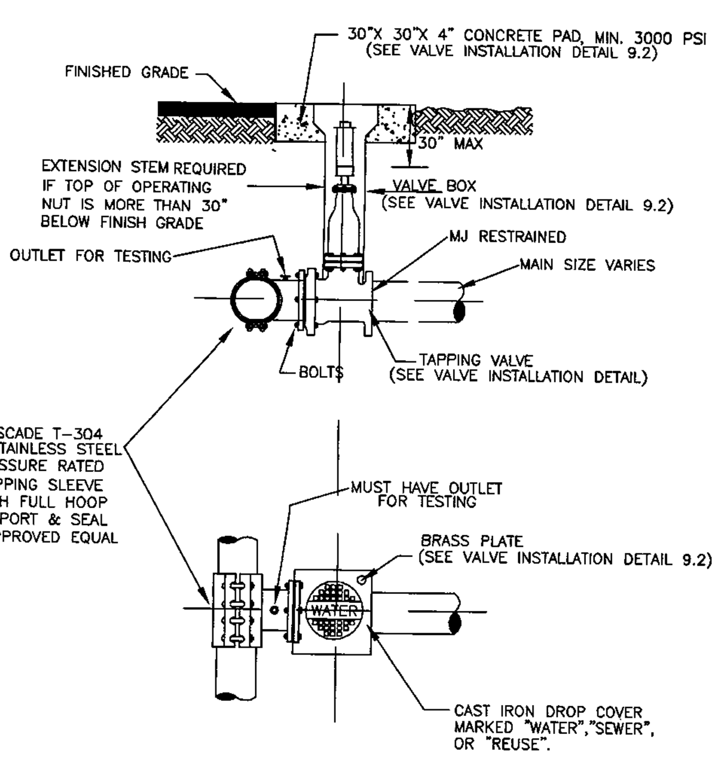

DATE: 02/22/00 S:\UTILS\ENGR\ACAD\DETAILS\1

STANDARD DETAIL NO. 9.2
LEE COUNTY UTILITIES
GATE VALVE INSTALLATION

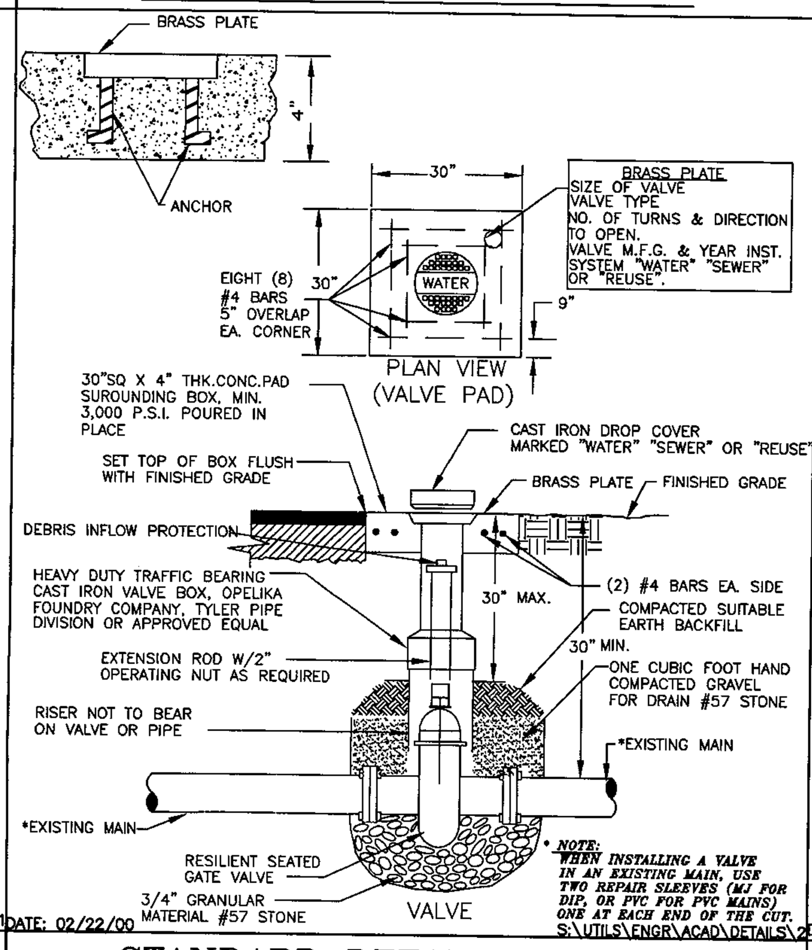

DATE: 02/22/00 S:\UTILS\ENGR\ACAD\DETAILS\2

STANDARD DETAIL NO. 9.4
LEE COUNTY UTILITIES
TRENCH CROSS SECTION

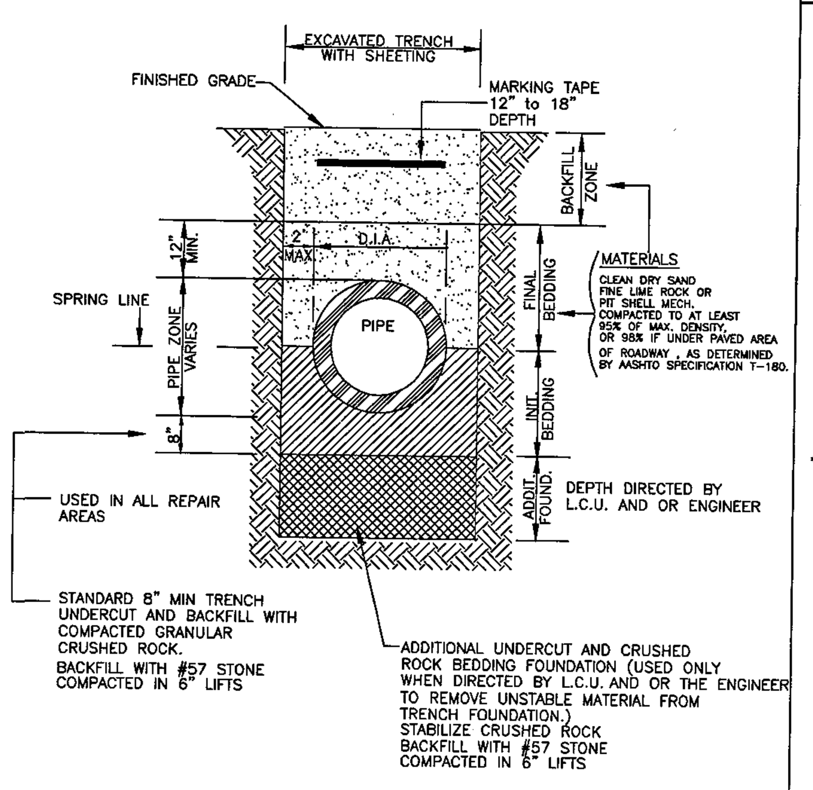

NTS
DATE: 02/22/00 S:\UTILS\ENGR\ACAD\DETAILS\4

STANDARD DETAIL NO. 9.6
LEE COUNTY UTILITIES
WATER PRESSURE LINE VERTICAL OFFSET W/ DUCTILE IRON MJ FITTINGS & PIPE

JOINT RESTRAINT DEVICES FOR MECHANICAL JOINT DUCTILE IRON FITTINGS & PIPING SHALL BE:
EBAA IRON INC., -SERIES 1100,
STAR PIPE PRODUCTS RESTRAINTS
OR APPROVED EQUAL

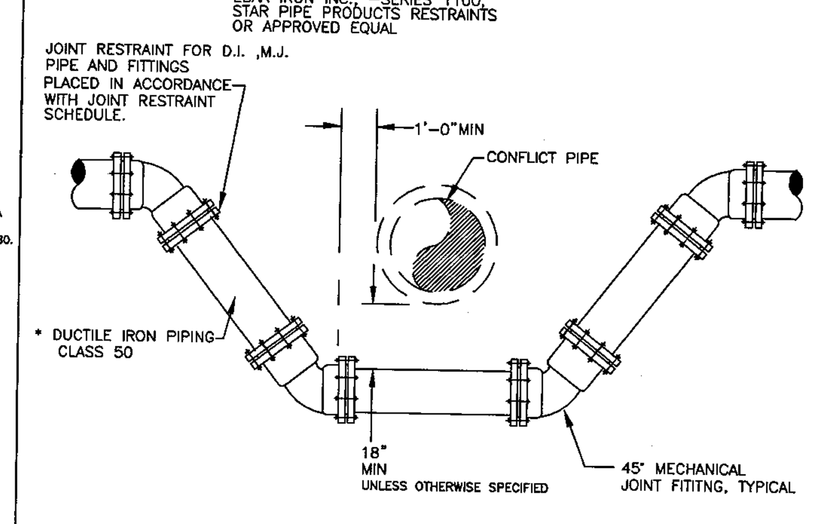

* IF MECHANICAL JOINT DUCTILE IRON FITTINGS ARE USED IN CONJUNCTION WITH P.V.C. PIPE, RESTRAINT DEVICES SHALL BE:
EBAA IRON INC., -SERIES 2000 PV
UNIFLANGE -SERIES 1300
STAR PIPE PRODUCTS RESTRAINTS
OR APPROVED EQUAL

NTS
DATE: 02/22/00 S:\UTILS\ENGR\ACAD\DETAILS\6

STANDARD DETAIL NO. 9.8
LEE COUNTY UTILITIES
RESTRAINED LENGTH SCHEDULE

DUCTILE IRON PIPE

PIPE SIZE (Inches)	RESTRAINED PIPE LENGTH (FEET) BENDS 90°	45°	22 1/2°	11 1/4°	DEAD END	TEE
4	17	7	4	2	21	0
6	23	10	5	2	32	2
8	29	12	6	3	42	6
10	35	14	7	4	53	17
12	41	17	8	4	62	26
16	51	21	11	5	81	44
24	69	29	14	7	114	75
30	81	34	17	8	140	99

PVC PIPE

PIPE SIZE (Inches)	RESTRAINED PIPE LENGTH (FEET) BENDS 90°	45°	22 1/2°	11 1/4°	DEAD END	TEE
4	20	8	4	2	33	2
6	29	12	6	3	50	6
8	36	15	8	4	66	9
10	44	18	9	5	83	24
12	51	21	11	5	99	39
16	63	26	13	7	130	66
24	87	36	18	9	183	120
30	102	42	21	10	222	158

LENGTH FIGURES BASED ON FOLLOWING:
Pressure = 150 psi, FS = 1.5, trench type = 3, 30" cover on Bare pipe, Soil type = GP & SP

S:\UTILS\ENGR\ACAD\DETAILS\8

STANDARD DETAIL NO. 9.9
LEE COUNTY UTILITIES
WATER SERVICE INSTALLATION 5/8" THROUGH 1"

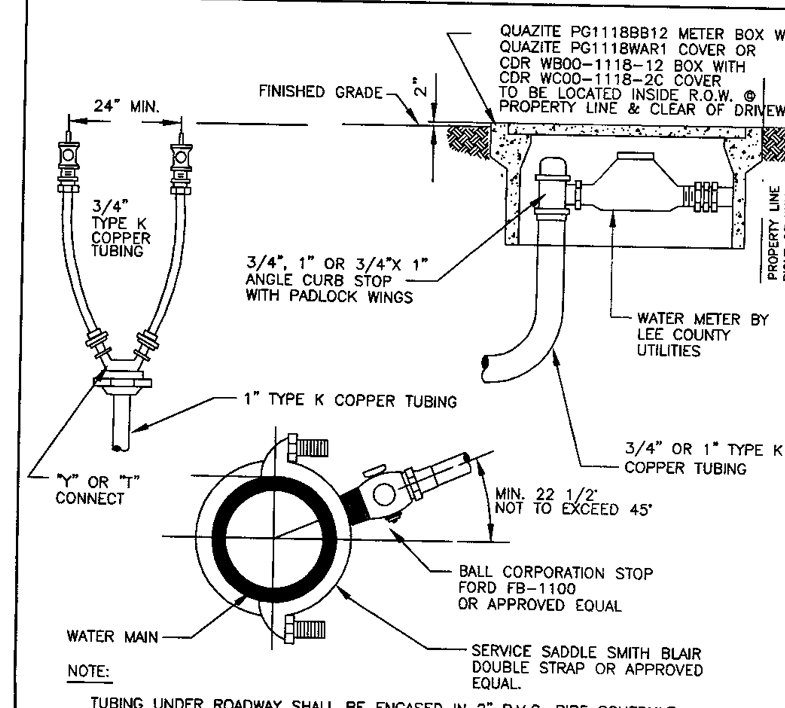

NOTE:
1. TUBING UNDER ROADWAY SHALL BE ENCASED IN 2" P.V.C. PIPE SCHEDULE 40 MINIMUM AND EXTEND 4 FEET BEYOND THE EDGES OF PAVEMENT OR BACK OF CURB.
2. CURB STOP SHALL BE FORD TYPE KV43-332W FOR 3/4", KV43-342W FOR 1" X 3/4" OR KV43-444W FOR 1" OR APPROVED EQUAL

ALTERNATIVE:
POLYETHYLENE, PE 3408 (200 PSI SDR 9, ASTM D3350), TUBING MAY BE SUBSTITUTED. COLOR FOR WATER SHALL BE BLUE.

NTS
DATE: 02/22/00 S:\UTILS\ENGR\ACAD\DETAILS\9

STANDARD DETAIL NO.9.10
LEE COUNTY UTILITIES
WATER SERVICE INSTALLATION 1 1/2" THROUGH 2"

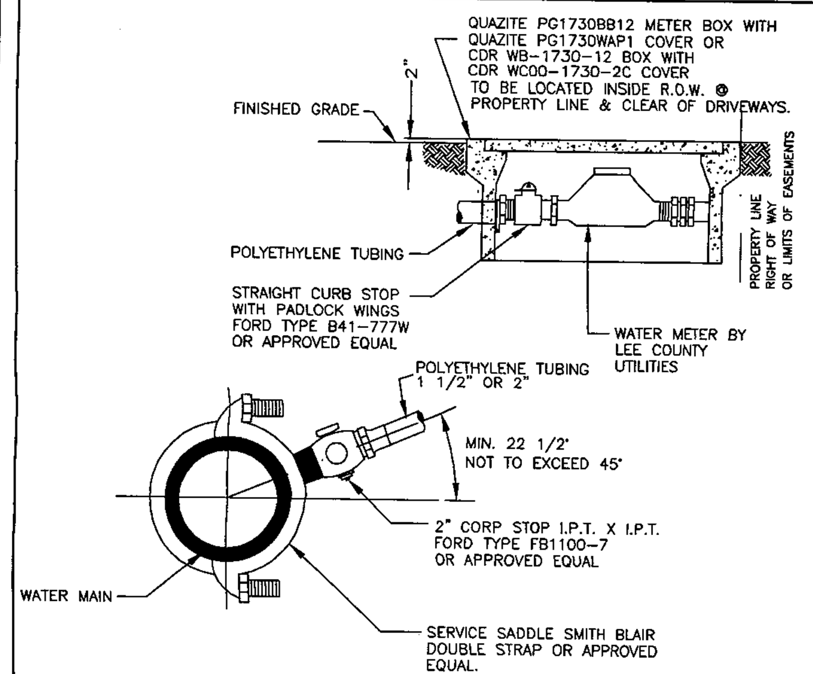

NOTE:
TUBING UNDER ROADWAY SHALL BE ENCASED IN 4" P.V.C. PIPE SCHEDULE 40 MINIMUM, AND EXTEND 4 FEET BEYOND THE EDGE OF PAVEMENT OR BACK OF CURB.

N.T.S.
DATE 02/22/00 S:\UTILS\ENGR\ACAD\DETAILS\10

STANDARD DETAIL NO. 9.11
LEE COUNTY UTILITIES
3/4" TO 2"CROSS CONNECTION CONTROL ASSEMBLY

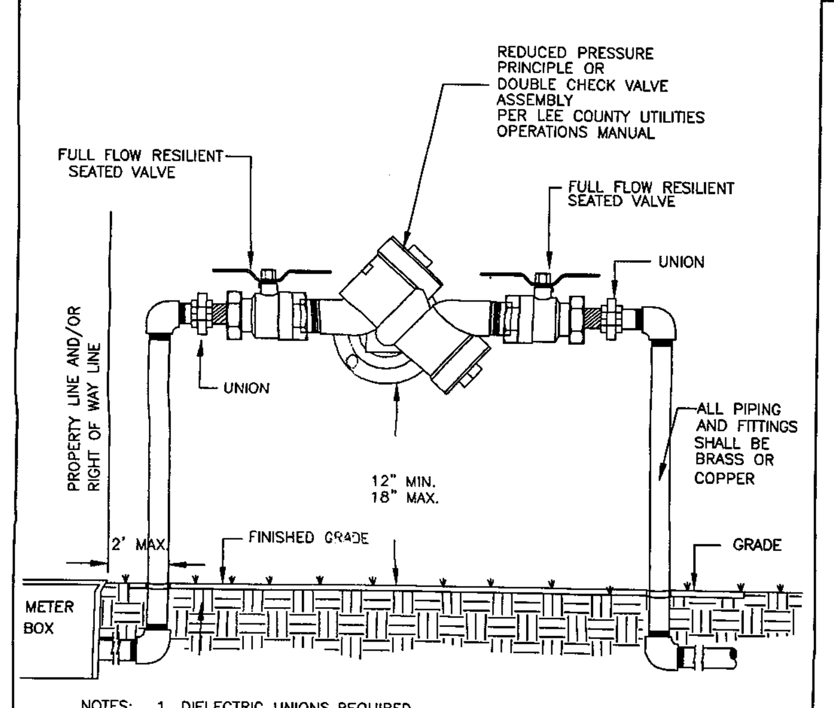

NOTES:
1. DIELECTRIC UNIONS REQUIRED
2. INITIAL AND ANNUAL DEVICE TESTING REQUIRED

DATE 06/26/2003 H:\ENGR\ACAD\DETAIL\11

STANDARD DETAIL NO.9.13A
LEE COUNTY UTILITIES
2 1/2" CROSS CONNECTION CONTROL ASSEMBLY

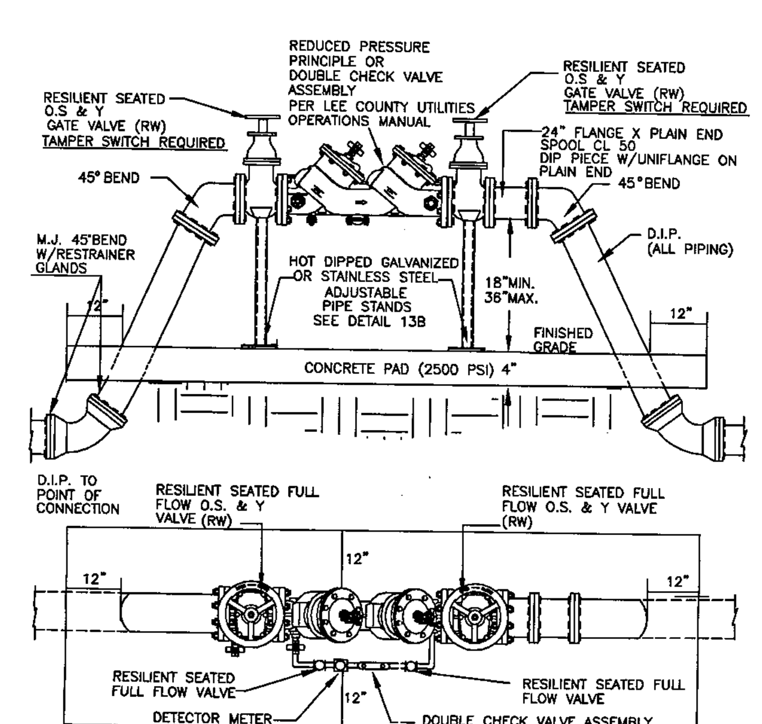

NOTE:
1. PAINT IN ACCORDANCE WITH LEE COUNTY UTILITIES OPERATIONS MANUAL.
2. ALL PIPING BETWEEN THE BELOW GROUND 45 BENDS AND THROUGH THE ASSEMBLY SHALL BE DIP, PRESSURE CLASS350 ABOVE GROUND DIP SHALL BE FLANGED

NTS
DATE: 06/26/2003 S:\UTILS\ENGR\ACAD\DETAILS\13

STANDARD DETAIL NO.9.13B
LEE COUNTY UTILITIES
PIPING SUPPORT

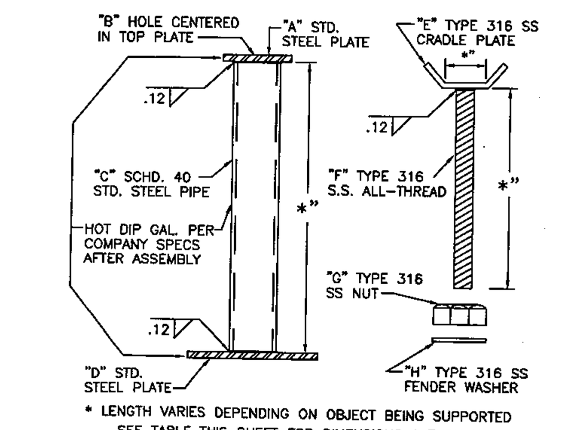

* LENGTH VARIES DEPENDING ON OBJECT BEING SUPPORTED
SEE TABLE THIS SHEET FOR DIMENSIONS A THRU H

PIPING SUPPORT
\STDS\WSC01-07 10-28-92 NTS

PIPING SUPPORT DIMENSIONS

	FOR 3/4" & 1"	FOR 1-1/2" TO 3"	FOR 4" & LARGER
A	1/4" x 3" x 3"	1/4"x3-1/4"x3-1/4"	1/4" x 5" x 5"
B	1.0"	1.0"	1-1/2"
C	2.0"	2-1/2"	4"
D	1/4" x 6" x 6"	1/4" x 8" x 8"	1/4" x 10" x 10"
E	1/4" x 2" X 4"	1/2" x 2" X 4"	1/2" x 4" x 6"
F	3/4"	7/8"	1-1/4"
G	3/4"	7/8"	1-1/4"
H	1.0"	1.0"	1-1/2"

\STDS\WSC01-08 10-28-92

DATE: 02/22/00 S:\UTILS\ENGR\ACAD\DETAILS\13B

STANDARD DETAIL NO. 9.14
LEE COUNTY UTILITIES
FIRE HYDRANT ASSEMBLY

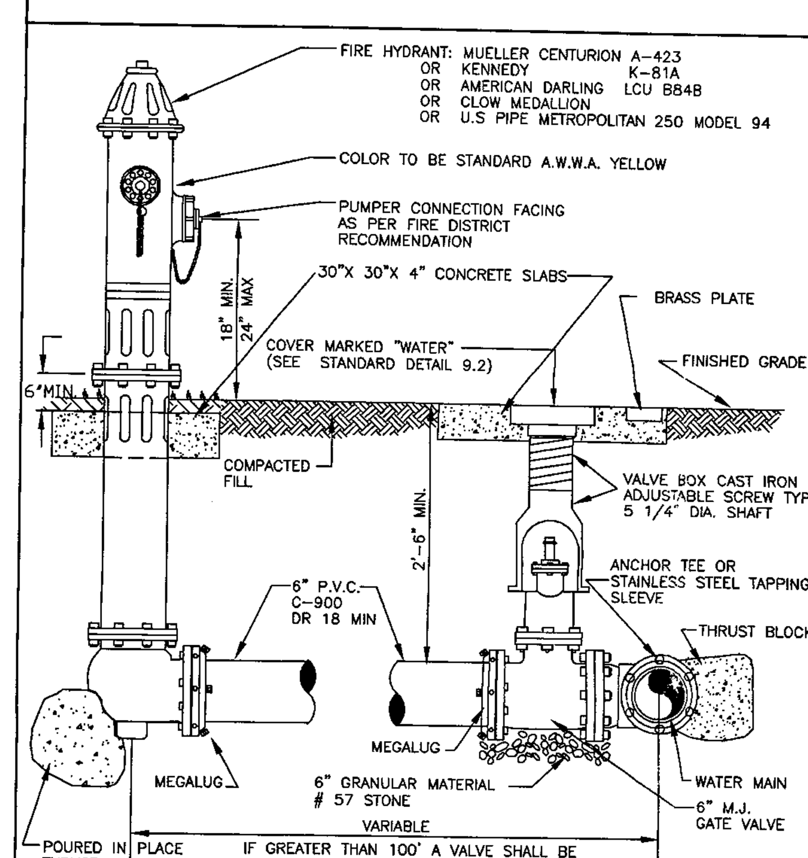

NTS
DATE: 02/22/00 S:\UTILS\ENGR\ACAD\DETAILS\14

STANDARD DETAIL NO. 9.15
LEE COUNTY UTILITIES
FIRE HYDRANT LOCATIONS/CLEARANCE

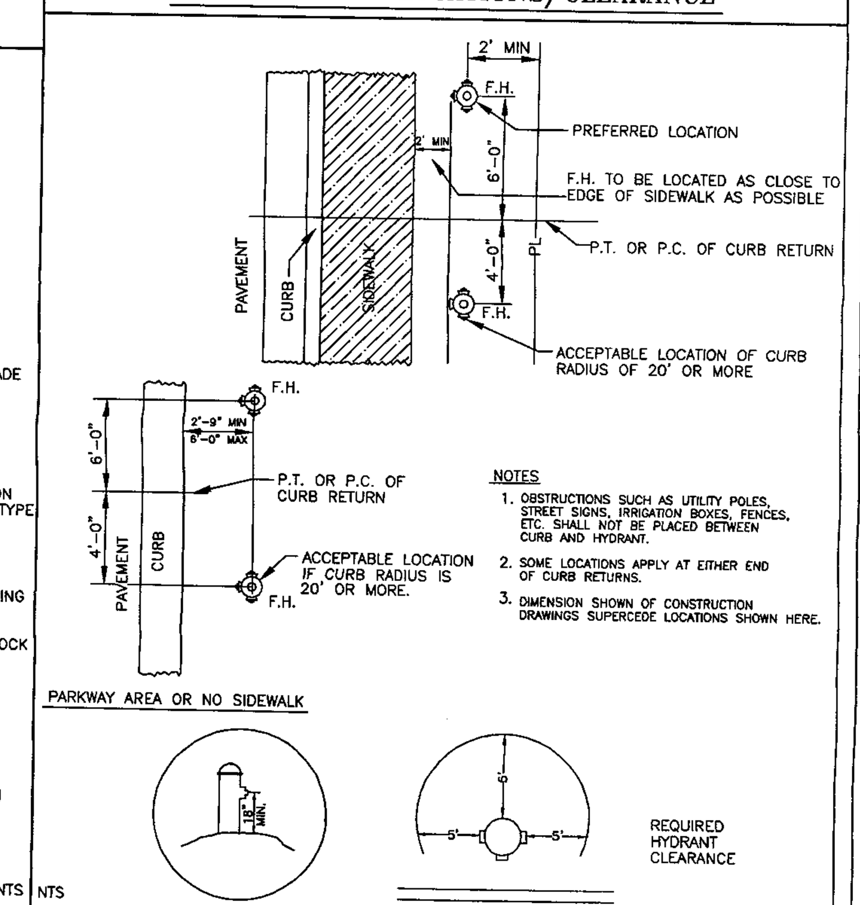

NOTES
1. OBSTRUCTIONS SUCH AS UTILITY POLES, STREET SIGNS, IRRIGATION BOXES, FENCES, ETC. SHALL NOT BE PLACED BETWEEN CURB AND HYDRANT.
2. SOME LOCATIONS APPLY AT EITHER END OF CURB RETURNS.
3. DIMENSION SHOWN OF CONSTRUCTION DRAWINGS SUPERCEDE LOCATIONS SHOWN HERE.

NTS
DATE: 02/22/00 S:\UTILS\ENGR\ACAD\DETAILS\15

STANDARD DETAIL NO.9.15A
LEE COUNTY UTILITIES
BOLLARD POST DETAIL

NOTE:
1. PAINT BOLLARD TO FIRE HYDRANT STANDARD SPECS.

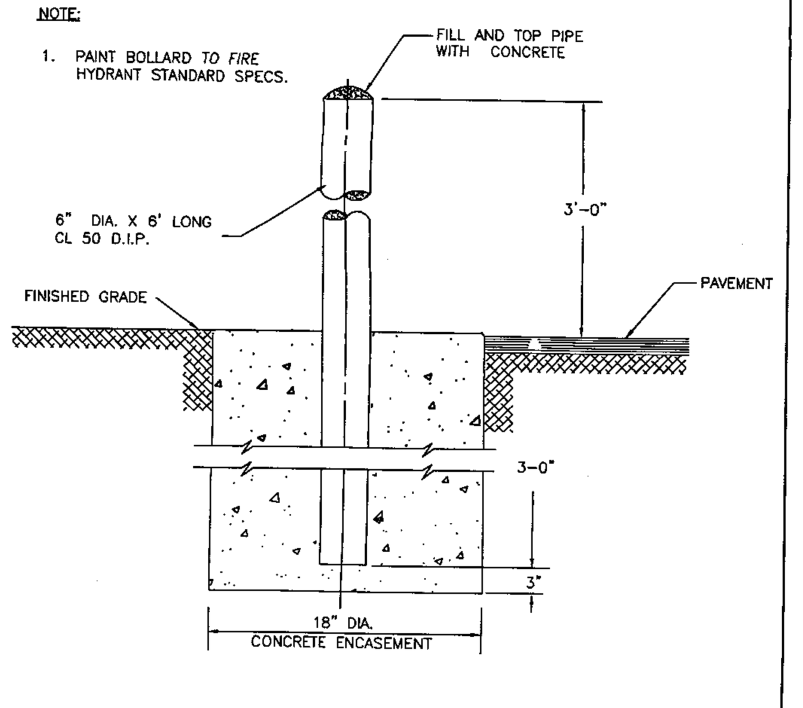

NTS
DATE: 02/22/00 S:\UTILS\ENGR\ACAD\DETAILS\15A

STANDARD DETAIL NO. 9.16
LEE COUNTY UTILITIES
WATER MAIN FLUSHING DETAIL

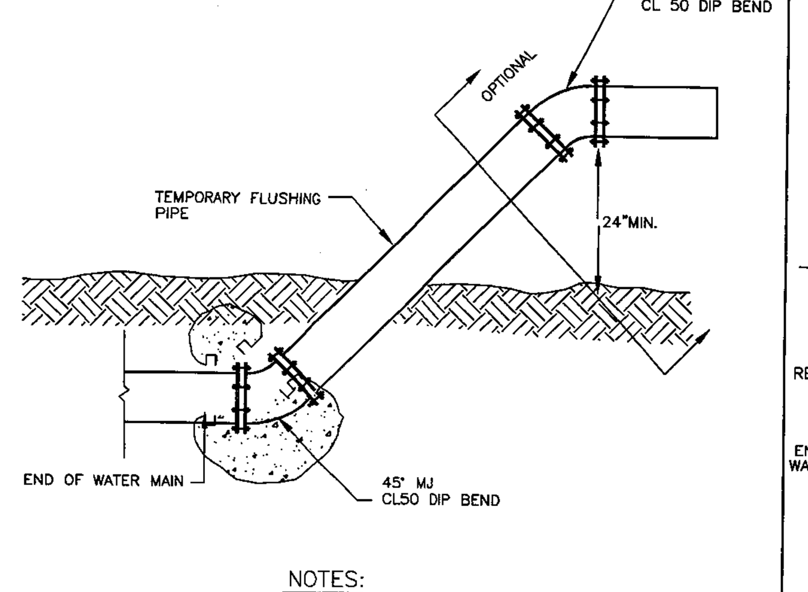

NOTES:
1. FLUSHING DETAIL TO BE USED ON WATER LINES > 8" DIAMETER.
2. FLUSHING PIPE SHALL BE THE SAME DIAMETER AS WATER MAIN.
3. AFTER FLUSHING HAS BEEN COMPLETED, CONTRACTOR SHALL INSTALL BLOW OFF PER STANDARD DETAIL.
4. CONTRACTOR SHALL PROVIDE ADEQUATE DRAINAGE FOR FLUSHED WATER.
5. PROVIDE M.J.CAP IF ASSEMBLY IS LEFT IN PLACE OVERNIGHT

NTS
DATE: 02/22/00 S:\UTILS\ENGR\ACAD\DETAILS\16

STANDARD DETAIL NO. 9.17
LEE COUNTY UTILITIES
BLOW OFF DETAIL

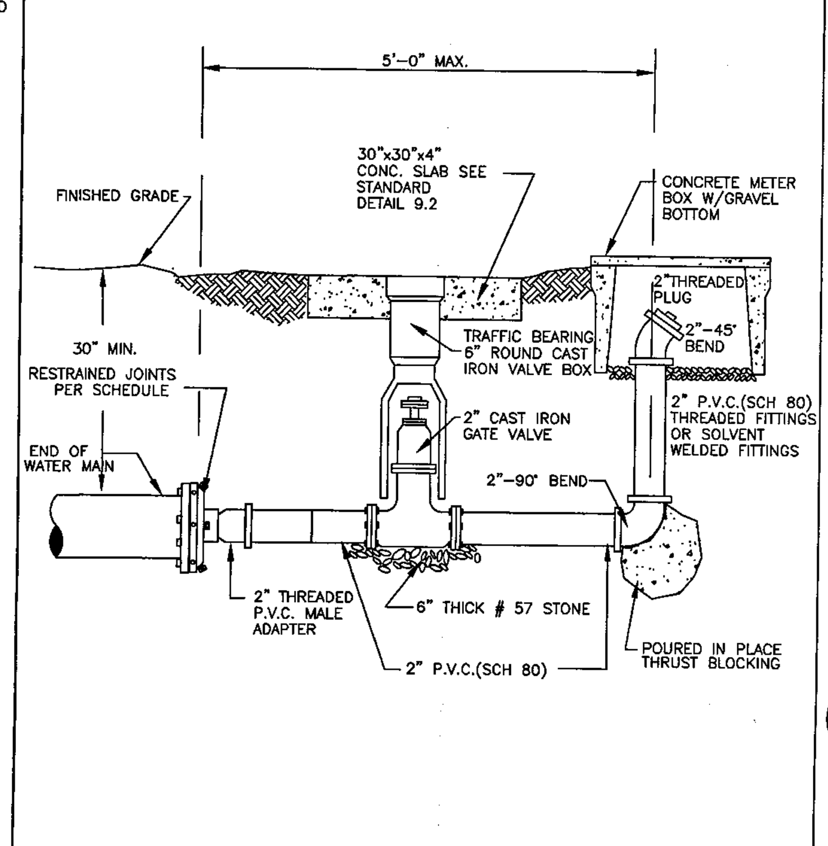

NTS
DATE: 02/22/00 S:\UTILS\ENGR\ACAD\DETAILS\17

STANDARD DETAIL NO. 9.19
LEE COUNTY UTILITIES
THRUST RESTRAINING

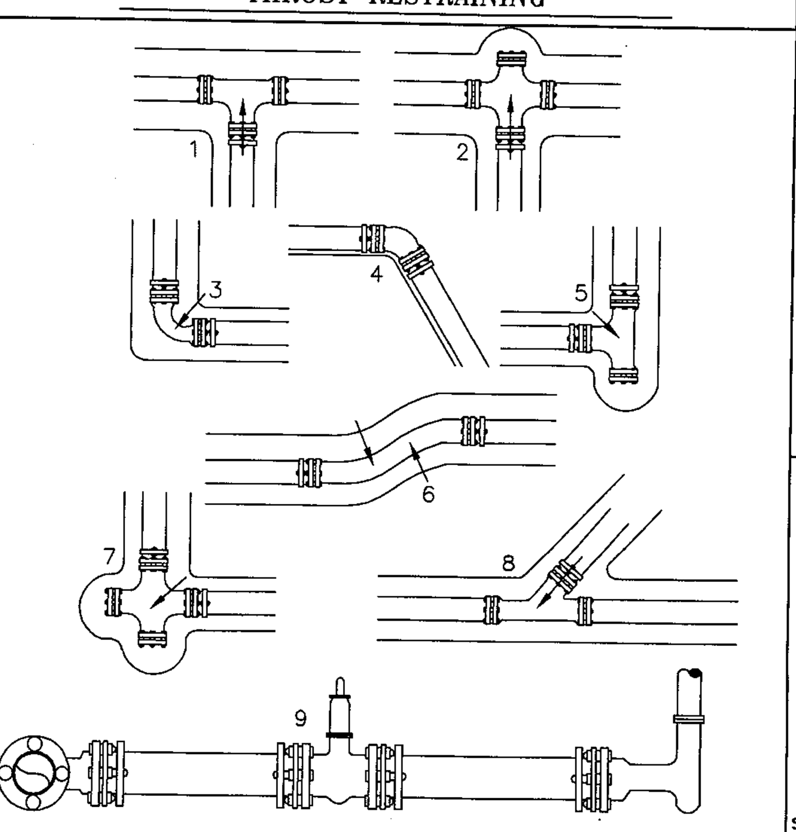

1. THRU LINE CONNECTION.
2. THRU LINE CONNECTION, CROSS USED AS
3. DIRECTION CHANGE, ELBOW
4. DIRECTION CHANGE, VERTICEL BEND
5. DIRECTION CHANGE, TEE USED
6. OFFSET CHANGE
7. DIRECTION CHANGE, CROSS USED AS ELBOW
8. TEE WYE LINE CONNECTION.
9. HYDRANT RUNOUT

DATE: 02/22/00 S:\UTILS\ENGR\ACAD\DETAILS\19

STANDARD DETAIL NO. 9.21
LEE COUNTY UTILITIES
WATER AND SEWER CROSSING DETAIL

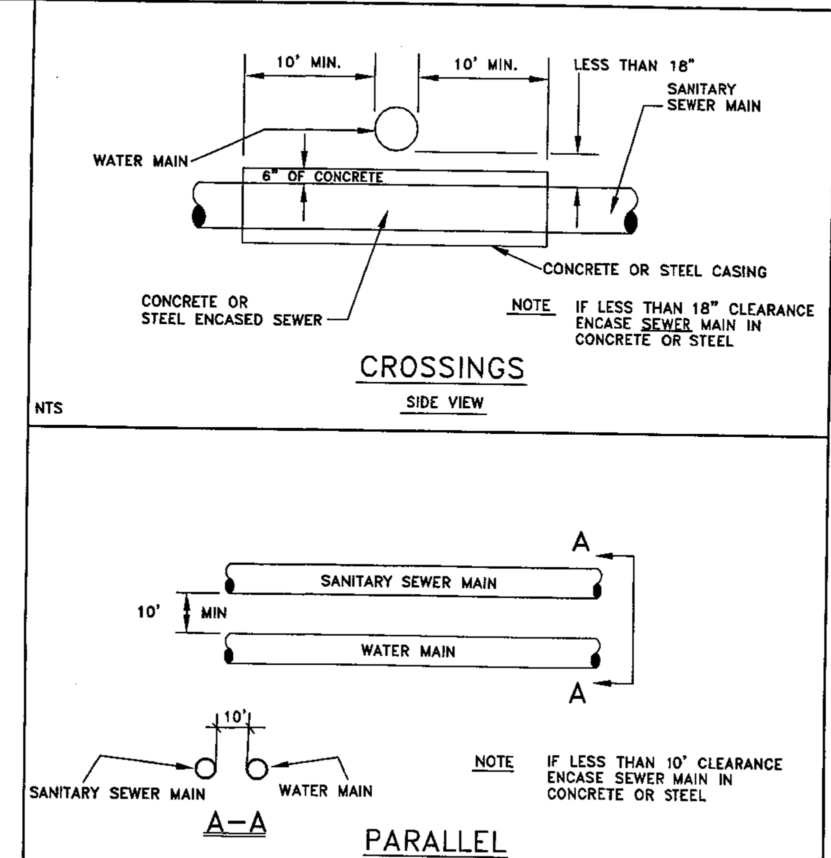

NTS
DATE 02/22/00 S:\UTILS\ENGR\ACAD\DETAILS\21

STANDARD DETAIL NO. 9.26
LEE COUNTY UTILITIES
BACTERIA SAMPLE VALVE

NOTE:
LINE EXTENSIONS OF BETWEEN 500 AND 3,000 FEET REQUIRE THE INSTALLATION OF A SAMPLING STATION AT THE RIGHT-OF-WAY LINE ON A METER SERVICE OR AS DIRECTED BY L.C.U. SAMPLING STATIONS ARE THEN TO BE INSTALLED FOR EACH ADDITIONAL, OR PART OF 2,500 FEET OF LINE INSTALLED.

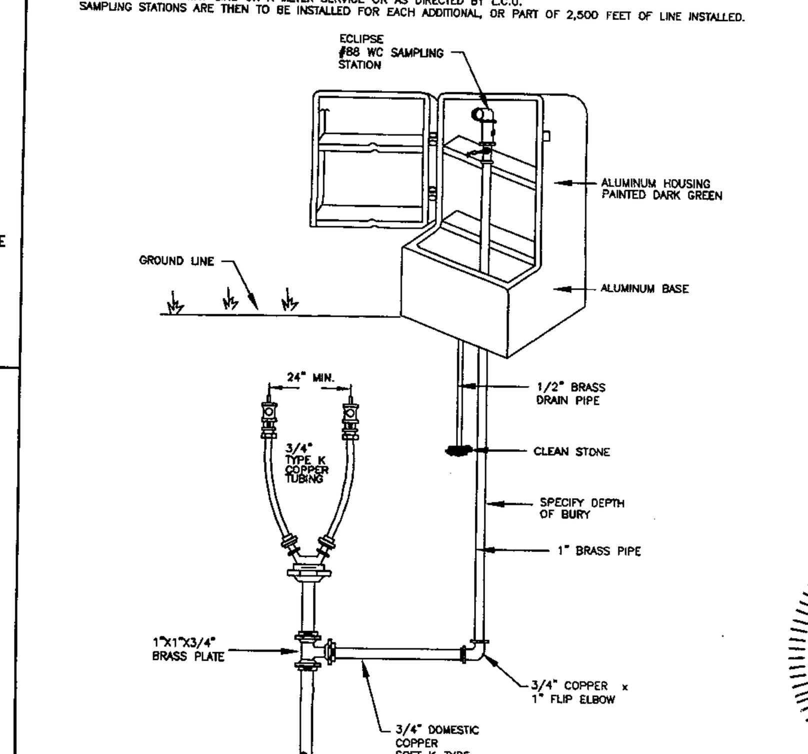

ECLIPSE NO. 88WC SAMPLING STATION OR EQUAL

NTS
DATE: 02/22/00 S:\UTILS\ENGR\ACAD\DETAILS\26

CHKD BY | REVISIONS | DATE

BARBOT, STEUART & ASSOCIATES, INC.
CONSULTING ENGINEERS
13861 PLANTATION ROAD, SUITE 105 - FORT MYERS, FLORIDA 33912
PHONE: (239) 936-7353 FAX: (239) 936-5823 EMAIL: MAIN@BSAENGINEERING.NET
LICENSE NUMBER: EB-000348
BSA

POTABLE WATER SYSTEM STANDARD DETAILS
LAKES OF ESTERO PHASE II
WILLIAM ROAD, ESTERO, FLORIDA 33928
STRAP #: 34 46 25 10 0000E.0000

FILE: 6634_UT.DWG
DRAWN BY: JTA
DESIGNED BY: IKS
DATE: 1/29/13

PREPARED UNDER THE DIRECTION OF:
IAN K. STEUART, P.E.
FL. REG. #15796
SHEET:
U3

SCALE: AS NOTED
PROJECT NUMBER: 6634

LDC
JUL 1 2 2013
APPROVED

© BARBOT, STEUART & ASSOCIATES, INC. - o:\6634_lakes of estero - mcdole\drawings\2012\6634_ut.dwg - 6/6/2013 12:19 PM

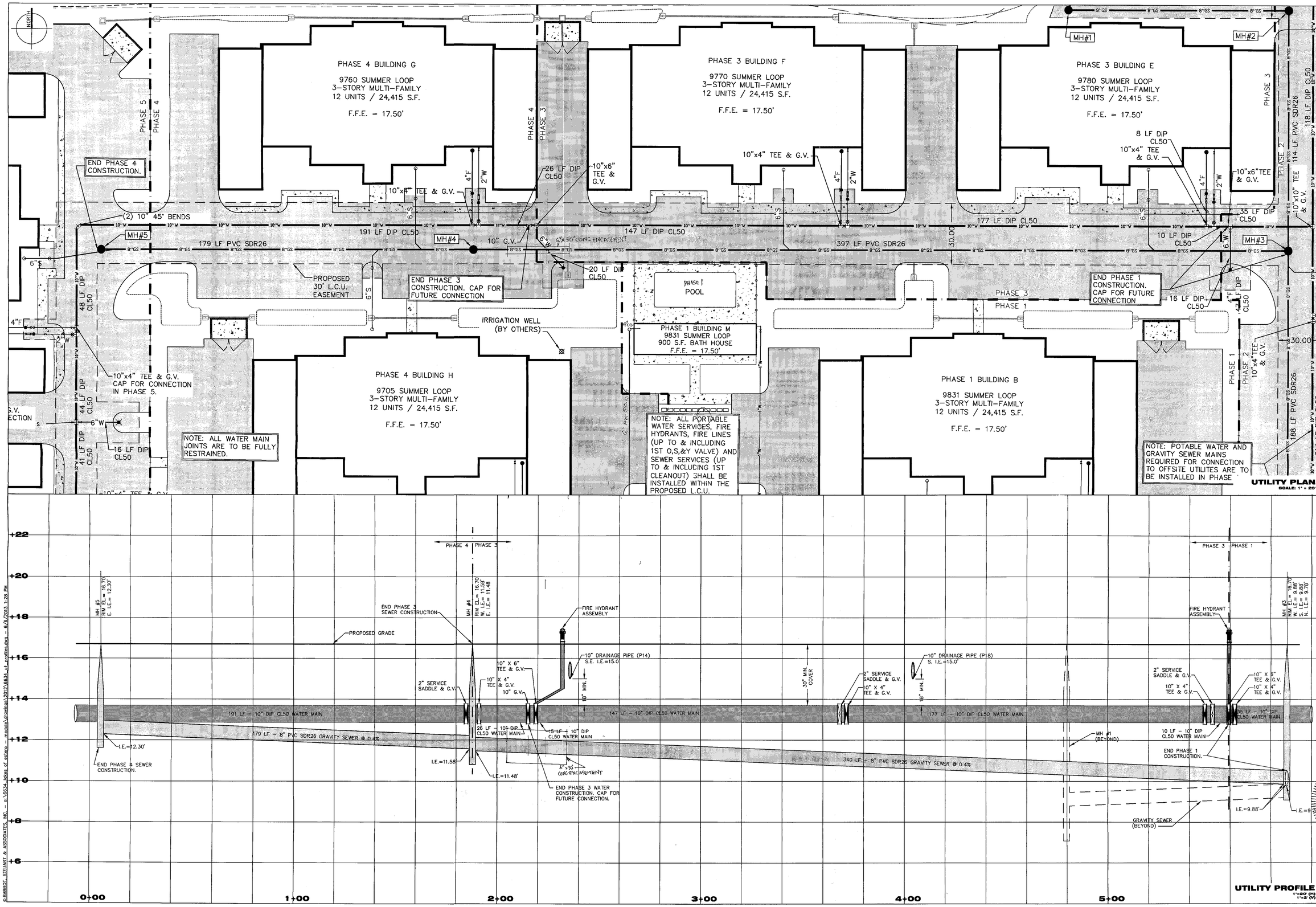

DATE	REVISIONS	CHKD BY
6/6/2013	REVISED PER 2/20/2013 CHECKLIST	DDS I.K.S

BARBOT, STEUART & ASSOCIATES, INC.
CONSULTING ENGINEERS
13680 PLANTATION ROAD, SUITE 15, FORT MYERS, FLORIDA 33912
PHONE: (239) 936-7353 FAX: (239) 936-5923 EMAIL: MAIN@BSAENGINEERING.NET

LICENSE NUMBER: EB0000348

WATER AND SEWER SYSTEM PLAN & PROFILE

LAKES OF ESTERO PHASE II

WILLIAM ROAD, ESTERO, FLORIDA 33928
STRAP # 34 46 25 10 0000E.0000

PREPARED UNDER THE DIRECTION OF
IAN K. STEUART P.E.
FL REG. #15298

SHEET NUMBER
U4

SCALE: AS NOTED

PROJECT NUMBER: 6634

FILE: 6634_UT_PROFILES.DWG
DRAWN BY: ADS
DESIGNED BY: JTA
DATE: 1/29/13

© BARBOT, STEUART & ASSOCIATES, INC. – o:\6634_lakes of estero – mccloskey\drawings\2012\6634_ut_profiles.dwg – 6/6/2013 1:28 PM

LDC
JUL 12 2013
APPROVED

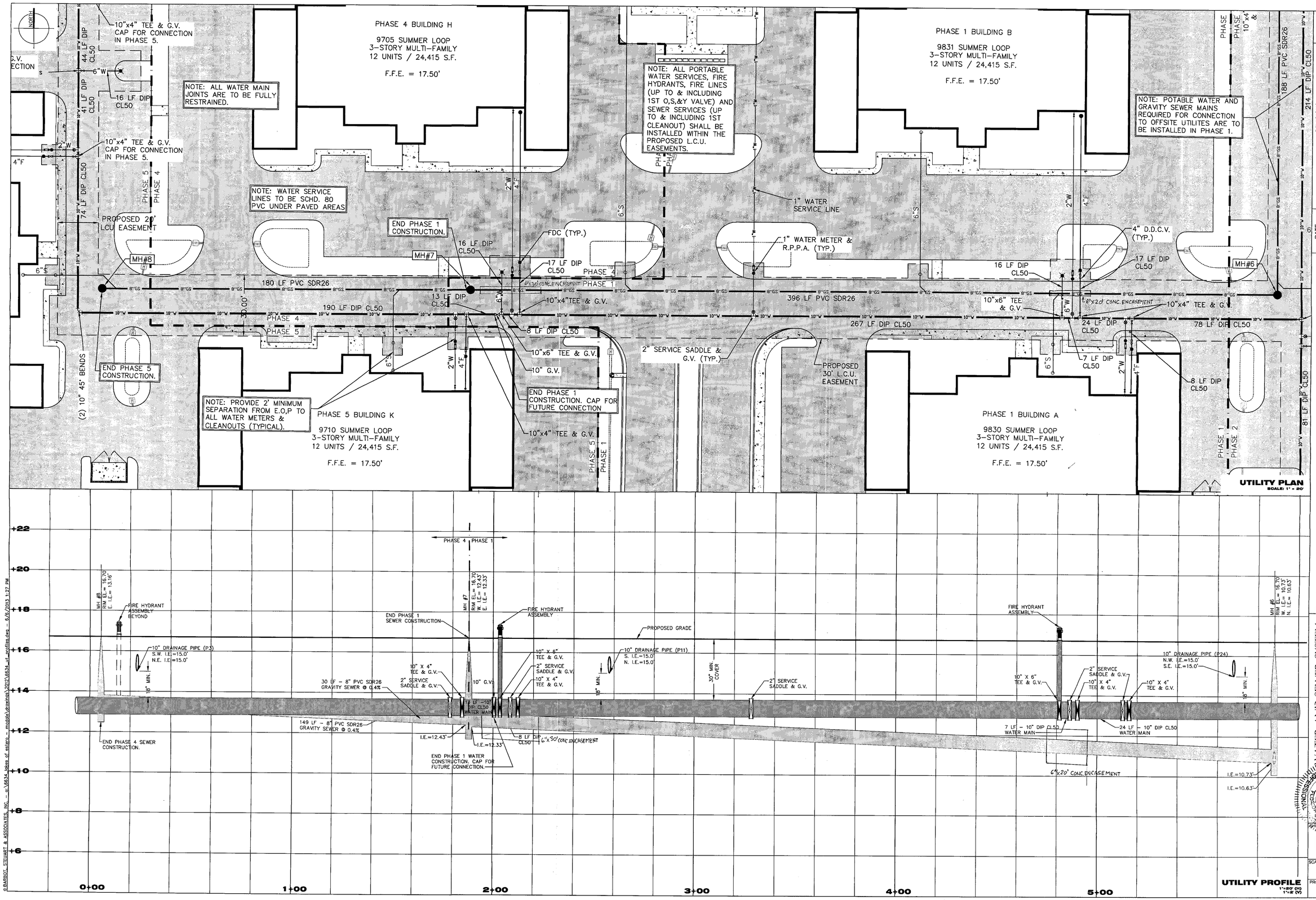

DATE	REVISIONS	CHKD BY
6/6/2013	REVISED PER 2/20/2013 CHECKLIST	DDS \ I.K.S.

BARBOT, STEUART & ASSOCIATES, INC.
CONSULTING ENGINEERS
13961 PLANTATION ROAD, SUITE 105, FORT MYERS, FLORIDA 33912
PHONE: (239) 936-7353 FAX: (239) 936-6923 EMAIL: MAIN@BSAENGINEERING.NET
LICENSE NUMBER: EB-0003348

WATER AND SEWER SYSTEM PLAN & PROFILE
LAKES OF ESTERO PHASE II
WILLIAM ROAD, ESTERO, FLORIDA 33928
STRAP #: 34 46 25 T0 0000E.0000

FILE: 6634 UT_PROFILES.DWG
DRAWN BY: ADS/JCS
DESIGNED BY: JTA
DATE: 1/28/13
SCALE: AS NOTED
PROJECT NUMBER: 6634
SHEET # U5

PREPARED UNDER THE DIRECTION OF: IAN K. STEUART, P.E. FL. REG. #15708

© BARBOT, STEUART & ASSOCIATES, INC. – q:\6634_lakes of estero – model\drawings\2012\6634_utl_profiles.dwg – 6/6/2013 1:27 PM

LDC
JUL 12 2013
APPROVED

LDC
JUL 12 2013
APPROVED

WATER AND SEWER SYSTEM PLAN & PROFILE

LAKES OF ESTERO PHASE II

WILLIAM ROAD, ESTERO, FLORIDA 33928
STRAP # 34-46-25-10-00006.0000

BARBOT, STEUART & ASSOCIATES, INC.
CONSULTING ENGINEERS
13961 PLANTATION ROAD, SUITE 105 - FORT MYERS, FLORIDA 33912
PHONE: (239) 936-7353 FAX: (239) 936-5823 EMAIL: MAIN@BSAENGINEERING.NET
LICENSE NUMBER: EB0000349

DATE	REVISIONS	CHKD BY
6/6/2013	REVISED PER 2/20/2013 CHECKLIST	DDS

DATE: 1/29/13 | DESIGNED BY: JTA | DRAWN BY: ADS/JOS | FILE: 6634_UT_PROFILES.DWG

SCALE: AS NOTED | PROJECT NUMBER: 6634

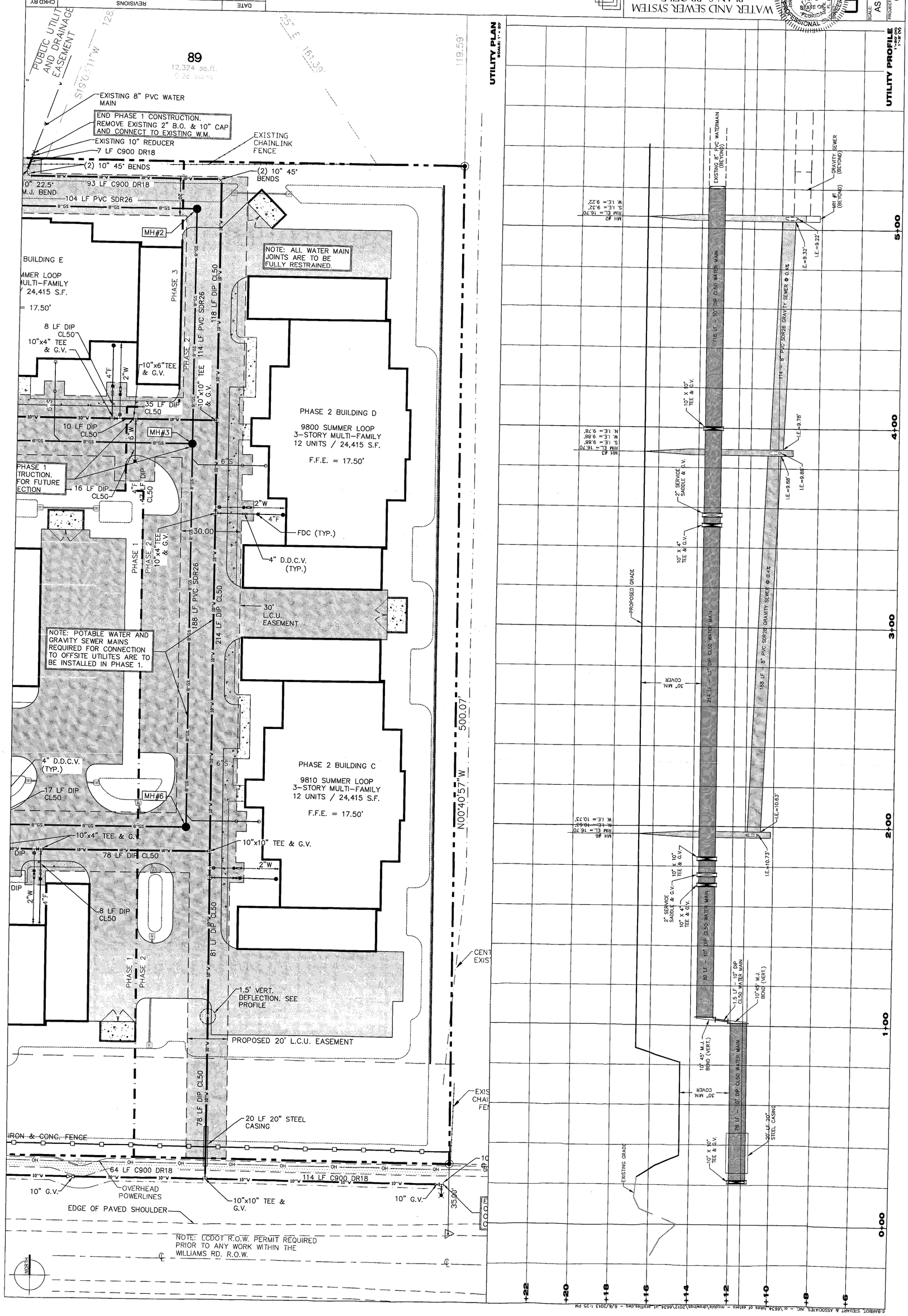

BARBOT, STEUART & ASSOCIATES, INC. - c:\6634 dwgs of estero - mcclelland\2012\6634_ut_profiles.dwg - 6/6/2013 1:25 PM

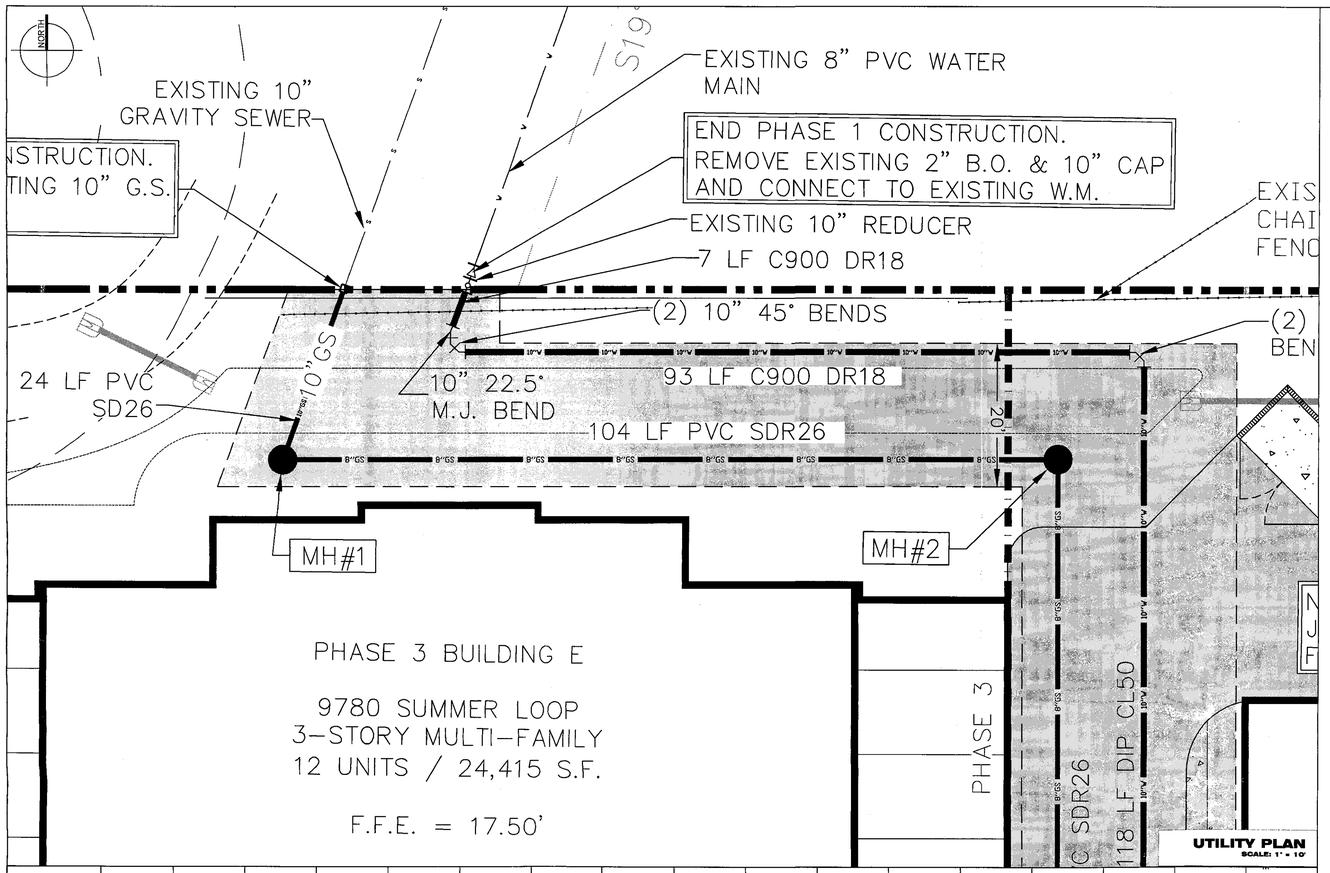

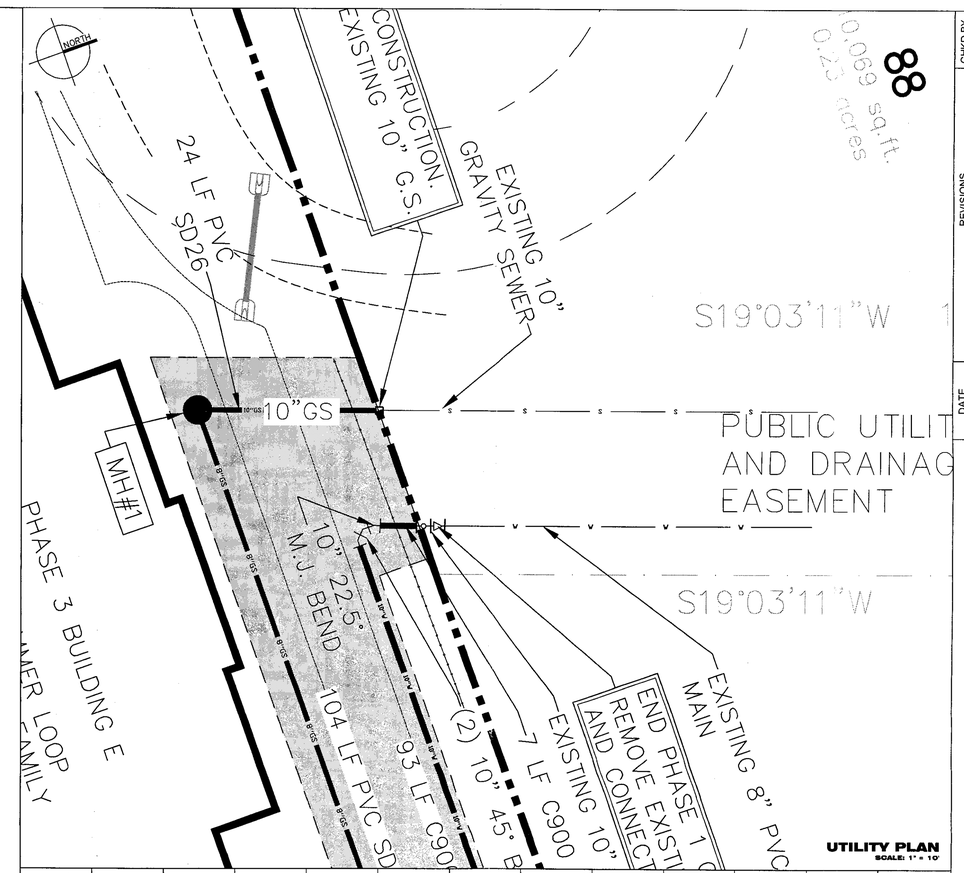

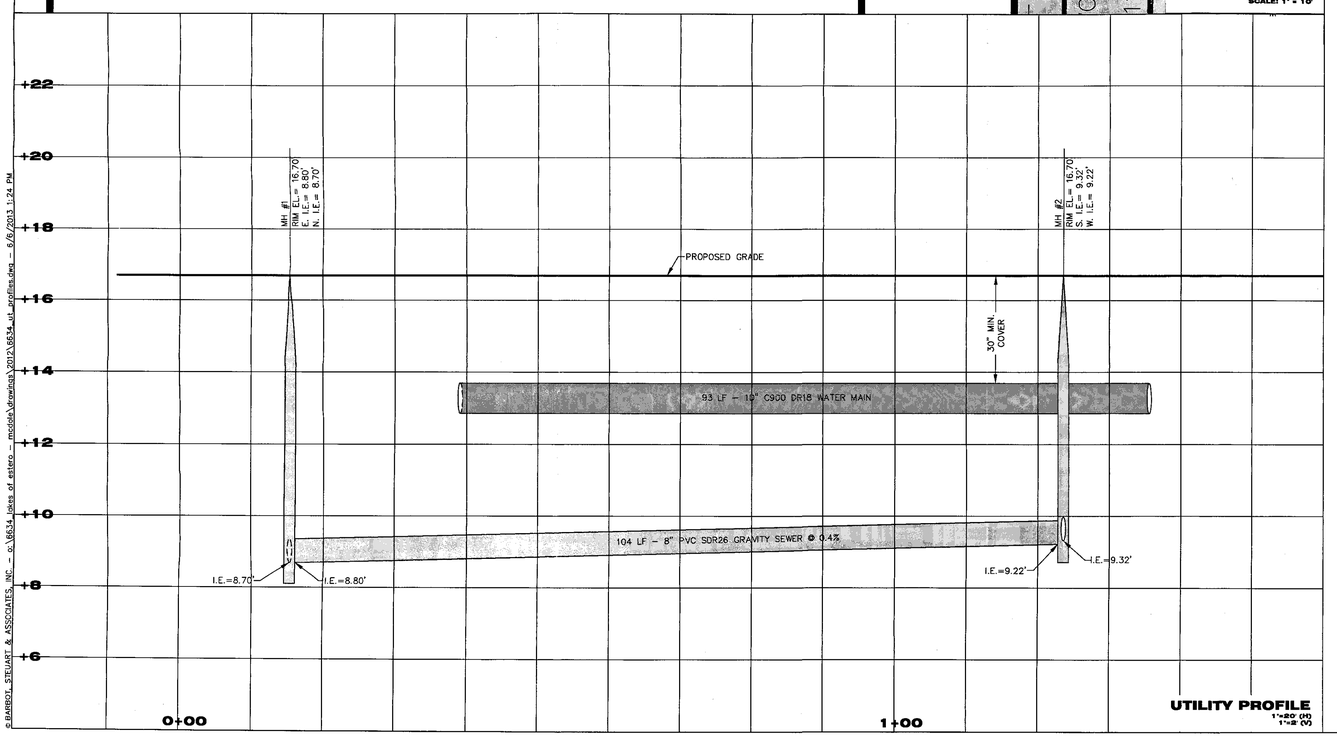

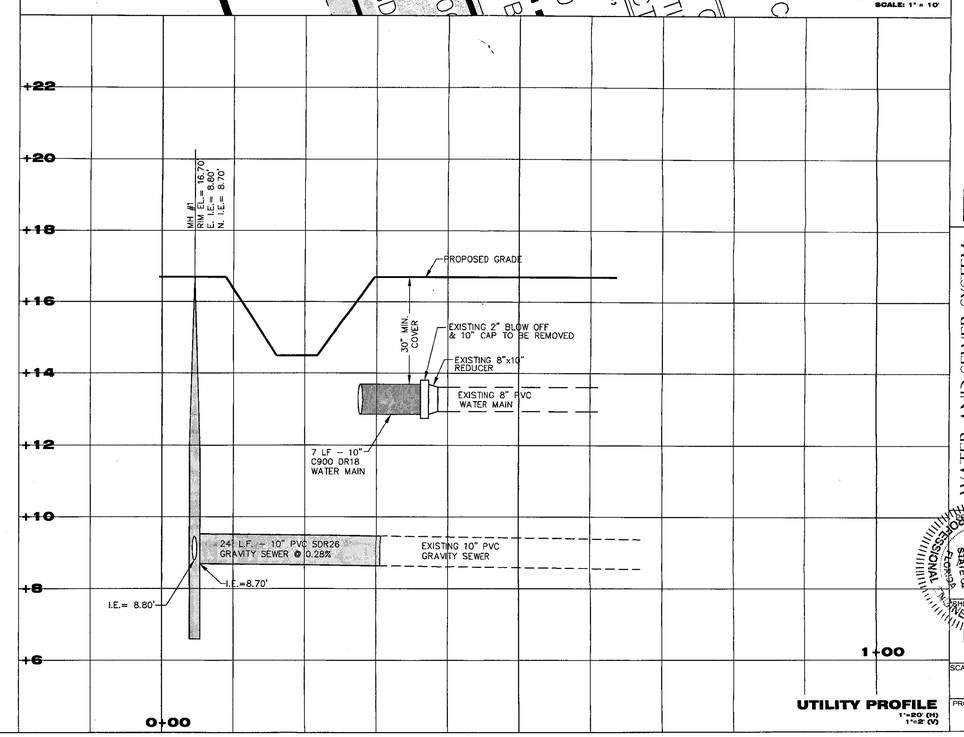

© BARBOT, STEUART & ASSOCIATES, INC. – c:\6634_lakes of estero – models\drawings\2012\6634_util_profiles.dwg – 6/6/2013 1:24 PM

88

0.069 sq.ft.
0.23 acres

DATE	REVISIONS	CHKD BY

BARBOT, STEUART & ASSOCIATES, INC.
CONSULTING ENGINEERS
13861 PLANTATION ROAD, SUITE 105 · FORT MYERS, FLORIDA 33912
PHONE: (239) 936-7353 FAX: (239) 936-5823 EMAIL: MAIN@BSAENGINEERING.NET
LICENSE NUMBER: EB-0000348

WATER AND SEWER SYSTEM
PLAN & PROFILE
LAKES OF ESTERO PHASE II
WILLIAM ROAD, ESTERO, FLORIDA 33928
STRAP # 24-46-25-W2-00000.0000

PREPARED UNDER THE DIRECTION OF
JOHN K. STEUART
STATE OF FLORIDA
JOHN K. STEUART
FL REG. #15251
PROFESSIONAL ENGINEER

SHEET: U7

SCALE: AS NOTED
PROJECT NUMBER: 6634

DRAWN BY: ADS/JCS
DESIGNED BY: JTA
DATE: 12/2/13
FILE: 6634_UT_PROFILES.DWG

LDC
JUL 12 2013
APPROVED

NORTH

(2) 10" 45° BENDS

END PHASE 5 CONSTRUCTION.

MH #8

PROPOSED 20' LCU EASEMENT

74 LF DIP CL50

4" TEE & G.V. FOR CONNECTION IN PHASE 5.

10"x4" TEE & G.V. CAP FOR CONNECTION IN PHASE 5.

PHASE 5

PHASE 4

41 LF DIP CL50

44 LF DIP CL50

6"W

16 LF DIP CL50

10"x4" TEE & G.V. CAP FOR CONNECTION IN PHASE 5.

NOTE: A JOINTS RESTRAI

48 LF DIP CL50

MH #5

(2) 10" 45° BENDS

END PHASE 4 CONSTRUCTION.

179

4"F

6"S

2"W

10"W

DATE	REVISIONS	CHKD BY
6/6/2013	REVISED PER 2/20/2013 CHECKLIST	DDS I.K.S

UTILITY PROFILE
1"=20' (H)
1"=2' (V)

BARBOT, STEUART & ASSOCIATES, INC.
CONSULTING ENGINEERS
13861 PLANTATION ROAD, SUITE 105 - FORT MYERS, FLORIDA 33912
PHONE: (239) 936-7353 FAX: (239) 936-5923 EMAIL: MAIN@BSAENGINEERING.NET
LICENSE NUMBER: EB-0003348

WATER AND SEWER SYSTEM PLAN & PROFILE

LAKES OF ESTERO PHASE II

WILLIAMS ROAD, ESTERO, FLORIDA 33928
STRAP # 34-46-25-10-00000E.0000

PREPARED UNDER DIRECTION OF:
IAN K. STEUART, P.E.
FL. REG. #15709

SCALE: AS NOTED

PROJECT NUMBER: 6634

DATE: 1/28/13 | DESIGNED BY: JTA | DRAWN BY: ADS/JOS | FILE: 6634_UT_PROFILES.DWG

B:\BARBOT, STEUART & ASSOCIATES, INC. - c:\6634_lakes of estero - mcd6\a\drawing\2012\6634_ut_profiles.dwg - 6/6/2013 1:23 PM

LDC

JUL 12 2013

APPROVED

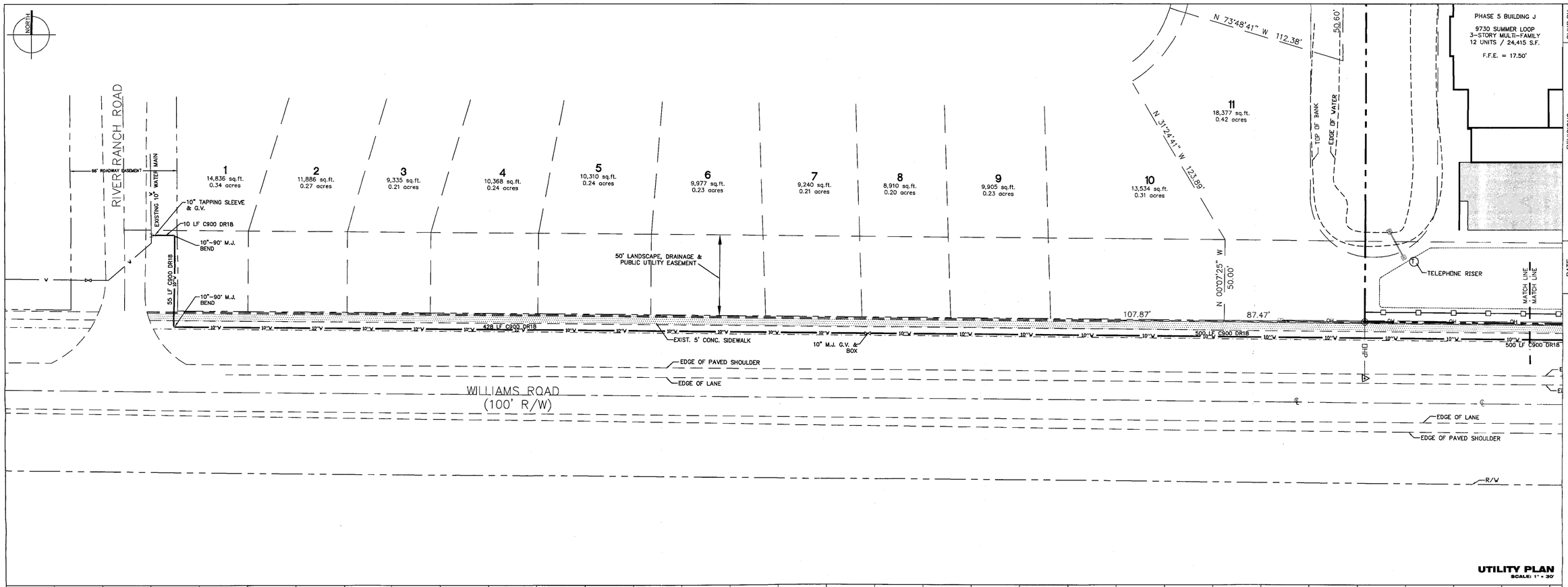

UTILITY PLAN
SCALE: 1" = 30'

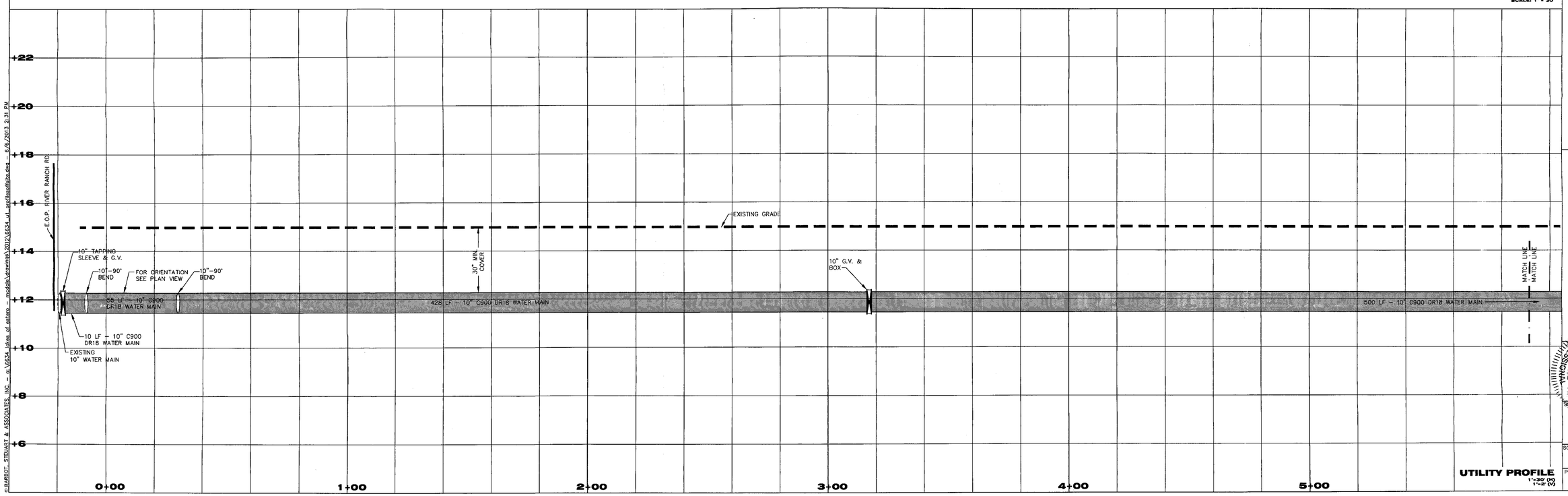

UTILITY PROFILE
1"=30' (H)
1"=2' (V)

DATE	REVISIONS	CHKD BY
6/6/2013	REVISED PER 2/20/2013 CHECKLIST	DDS | K.S

BARBOT, STEUART & ASSOCIATES, INC.
CONSULTING ENGINEERS
13661 PLANTATION ROAD, SUITE 105 - FORT MYERS, FLORIDA 33912
PHONE: (239) 936-7253 / FAX: (239) 936-5823 EMAIL: MAIN@BSAENGINEERING.NET
LICENSE NUMBER EB-000248

UTILITY PLAN & PROFILE

LAKES OF ESTERO PHASE II

WILLIAM ROAD, ESTERO, FLORIDA 33928
STRAP # 34-46-25-10-0000E.0000

PREPARED UNDER MY DIRECTION OR SUPERVISION
STATE OF FLORIDA
IAN K. STEUART, P.E.
FL. REG. #15798
PROFESSIONAL ENGINEER

SHEET NUMBER: U9

SCALE: AS NOTED

PROJECT NUMBER: 6634

DRAWN BY: ADS
DESIGNED BY: JTA
DATE: 1/28/13
FILE: 6634_UT_PROFILES0FTSITE.DWG

LDC
JUL 12 2013
APPROVED

© BARBOT, STEUART & ASSOCIATES, INC. - \6634 lakes of estero - mcclain\drawings\2012\6634 ut profiles0fte.dwg - 6/6/2013 2:31 PM

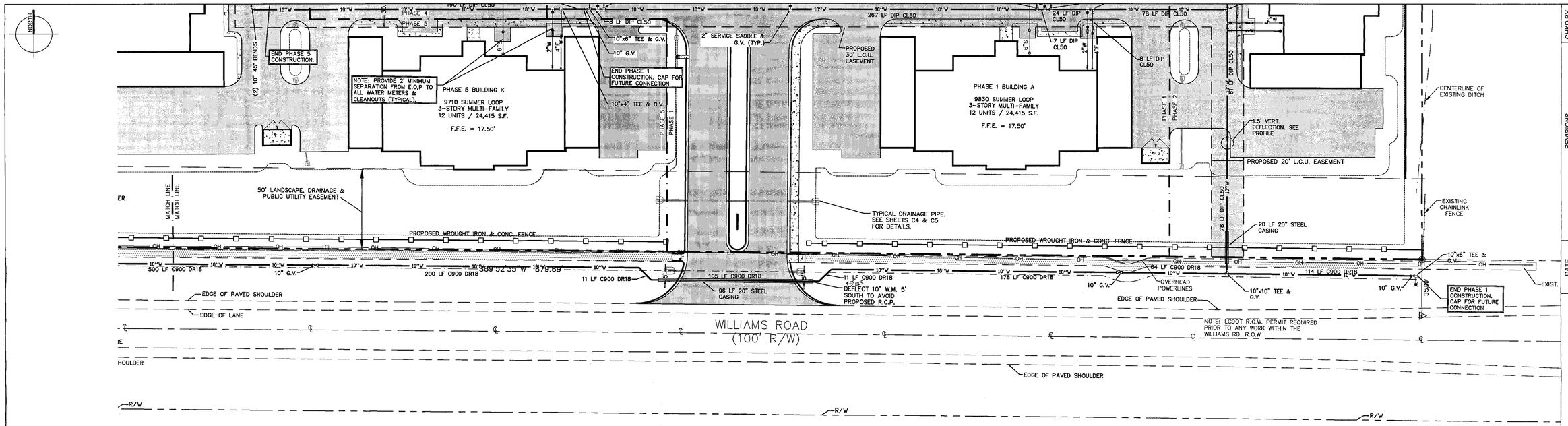

UTILITY PLAN
SCALE: 1" = 30'

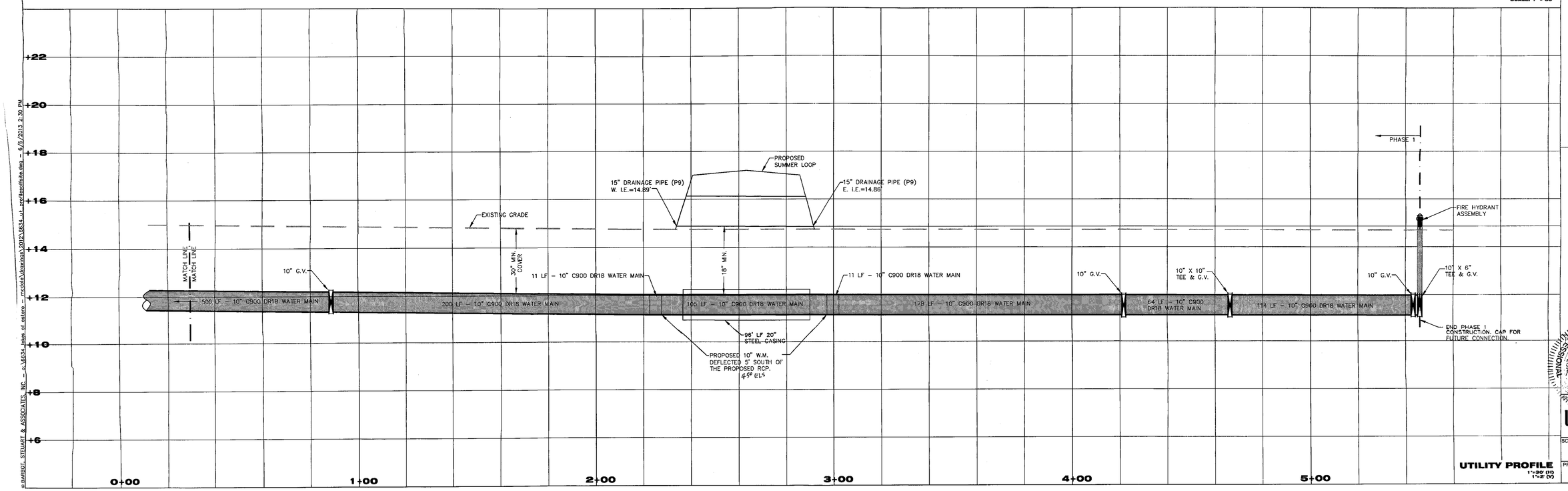

UTILITY PROFILE
1"=30' (H)
1"=2' (V)

DATE	REVISIONS	CHKD BY
6/6/2013	REVISED PER 2/20/2013 CHECKLIST	DDS | K.S

BARBOT, STEUART & ASSOCIATES, INC.
CONSULTING ENGINEERS
13961 PLANTATION ROAD, SUITE 105 - FORT MYERS, FLORIDA 33912
PHONE: (239) 936-7353 FAX: (239) 936-5823 EMAIL: MAIN@BSAENGINEERING.NET
LICENSE NUMBER: EB-0003348

UTILITY PLAN & PROFILE

LAKES OF ESTERO PHASE II

WILLIAM ROAD, ESTERO, FLORIDA 33928
STRAP #: 34-46-25-10-00000.0000

PREPARED UNDER DIRECTION OF:
IAN K. STEUART, P.E.
FL REG. #15734

DRAWN BY: ADS
DESIGNED BY: JTA
FILE: 6634-UT-PROFILE-SITE.DWG
DATE: 1/28/13
SCALE: AS NOTED
PROJECT NUMBER: 6634
U10

JUL 12 2013
APPROVED

© BARBOT, STEUART & ASSOCIATES, INC. – o:\6634 lakes of estero – mcolch\drawings\2012\6634_ut_profilesofsite.dwg – 6/6/2013 2:30 PM

IF ANY ERRORS OR OMISSIONS EXIST IN THE DRAWINGS AND SPECIFICATIONS, THE CONTRACTOR SHALL WITHIN 10 DAYS AFTER THE RECEIPT OF THESE PLANS AND PRIOR TO CONSTRUCTION NOTIFY THE DESIGNER IN WRITING OF SUCH ERRORS OR OMISSIONS, OR BE HELD RESPONSIBLE FOR THE RESULTS AND COST OF RECTIFYING THE SAME.

PROPOSED FRONT ELEVATION

3/16" = 1'-0"

PRELIMINARY NOT FOR CONSTRUCTION

COMMENTS	BY
08-05-08	JAE

2004 F.B.C. W/ 2006 AMENDMENTS

LAKES OF ESTERO

CONIDARIS DEVELOPMENT

Matrix ENGINEERING & DESIGN, L.L.C.
C.A. # 00001876
25435 WEST NEWBERRY ROAD
NEWBERRY, FL 32669
PH: 352.474.6330 FAX: 352.474.6331

NOT FOR CONSTRUCTION

Charles A. Wuller P.E.
Reg. No. 46032
Date:

DRAWN
JAE
CHECKED
[illegible]/08
SCALE
–
JOB NO.
E-02408
SHEET
1
OF 7 SHEETS

IF ANY ERRORS OR OMISSIONS EXIST IN THE DRAWINGS AND SPECIFICATIONS, THE CONTRACTOR SHALL WITHIN 10 DAYS AFTER THE RECEIPT OF THESE PLANS AND PRIOR TO CONSTRUCTION NOTIFY THE DESIGNER IN WRITING OF SUCH ERRORS OR OMISSIONS, OR BE HELD RESPONSIBLE FOR THE RESULTS AND COST OF RECTIFYING THE SAME.

COMMENTS	BY
08-05-08	JAE

PROPOSED BACK ELEVATION

3/16" = 1'-0"

PRELIMINARY NOT FOR CONSTRUCTION

2004 F.B.C. W/ 2006 AMENDMENTS

LAKES OF ESTERO

CONIDARIS DEVELOPMENT

Matrix
ENGINEERING & DESIGN, L.L.C.
C.A. #00001876
25435 WEST NEWBERRY ROAD
NEWBERRY, FL 32669
PH: 352.474.6330 FAX: 352.474.6331

NOT FOR CONSTRUCTION

Charles A. Walker, P.E.
Reg. No. 46032
Date:

DRAWN	JAE
CHECKED	--
DATE	07/31/08
SCALE	-
JOB NO.	E-02408
SHEET	2 OF 7 SHEETS

IF ANY ERRORS OR OMISSIONS EXIST IN THE DRAWINGS AND SPECIFICATIONS, THE CONTRACTOR SHALL WITHIN 10 DAYS AFTER THE RECEIPT OF THESE PLANS AND PRIOR TO CONSTRUCTION NOTIFY THE DESIGNER IN WRITING OF SUCH ERRORS OR OMISSIONS, OR BE HELD RESPONSIBLE FOR THE RESULTS AND COST OF RECTIFYING THE SAME.

PROPOSED LEFT ELEVATION

3/16" = 1'-0"

PRELIMINARY NOT FOR CONSTRUCTION

COMMENTS	BY
08-05-08	JAE

2004 F.B.C. W/ 2006 AMENDMENTS

LAKES OF ESTERO

CONIDARIS DEVELOPMENT

Matrix
ENGINEERING & DESIGN, L.L.C.
C.A. # 00001876
25435 WEST NEWBERRY ROAD
NEWBERRY, FL 32669
PH: 352.474.6330 FAX: 352.474.6331

NOT FOR CONSTRUCTION

Charles A. Wanek, P.E.
Reg. No. 46032
Date:

DRAWN
JAE
CHECKED
--
DATE
07/31/08
SCALE
--
JOB NO.
E-02408
SHEET
3
OF 7 SHEETS

IF ANY ERRORS OR OMISSIONS EXIST IN THE DRAWINGS AND SPECIFICATIONS, THE CONTRACTOR SHALL WITHIN 10 DAYS AFTER THE RECEIPT OF THESE PLANS AND PRIOR TO CONSTRUCTION NOTIFY THE DESIGNER IN WRITING OF SUCH ERRORS OR OMISSIONS, OR BE HELD RESPONSIBLE FOR THE RESULTS AND COST OF RECTIFYING THE SAME.

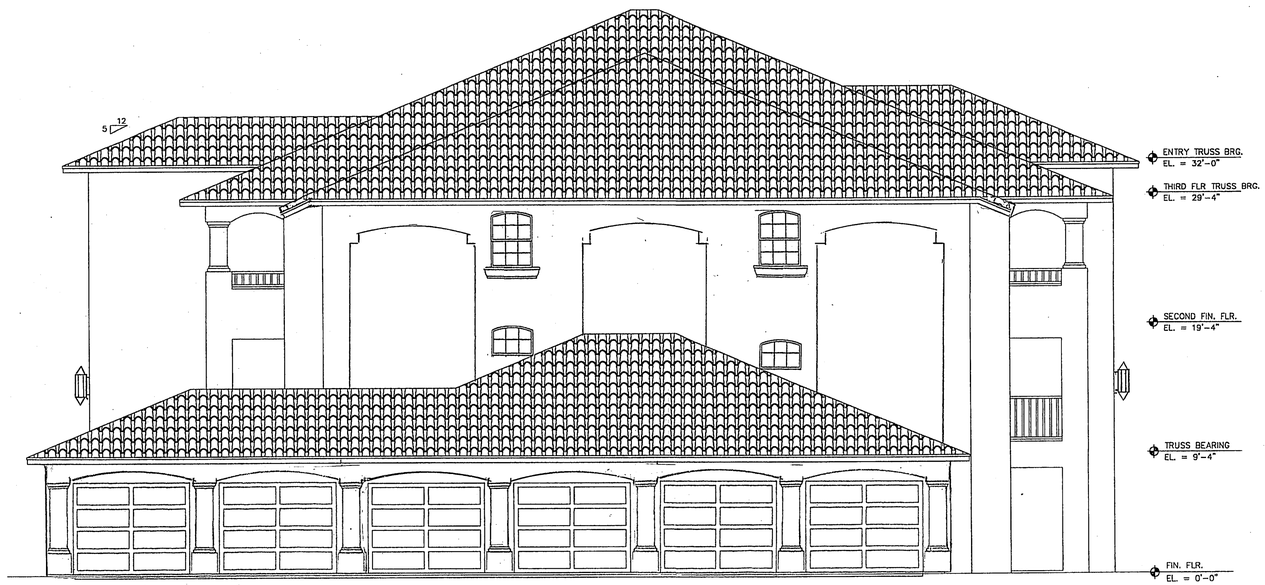

PROPOSED RIGHT ELEVATION

3/16" = 1'-0"

PRELIMINARY NOT FOR CONSTRUCTION

COMMENTS	BY
08-05-08	JAE

2004 F.B.C. W/ 2006 AMENDMENTS

LAKES OF ESTERO

CONIDARIS DEVELOPMENT

Matrix
ENGINEERING & DESIGN, L.L.C.
C.A. #0001876
25435 WEST NEWBERRY ROAD
NEWBERRY, FL 32669
PH: 352.474.6330 FAX: 352.474.6331

NOT FOR CONSTRUCTION

Charles A. Wuest, P.E.
Reg. No. 46032
Date:

DRAWN JAE
CHECKED --
DATE 07/31/08
SCALE -
JOB NO. E-02408
SHEET 4 OF 7 SHEETS

IF ANY ERRORS OR OMISSIONS EXIST IN THE DRAWINGS AND SPECIFICATIONS, THE CONTRACTOR SHALL WITHIN 10 DAYS AFTER THE RECEIPT OF THESE PLANS AND PRIOR TO CONSTRUCTION NOTIFY THE DESIGNER IN WRITING OF SUCH ERRORS OR OMISSIONS, OR BE HELD RESPONSIBLE FOR THE RESULTS AND COST OF RECTIFYING THE SAME.

COMMENTS	BY
08-05-08	JAE

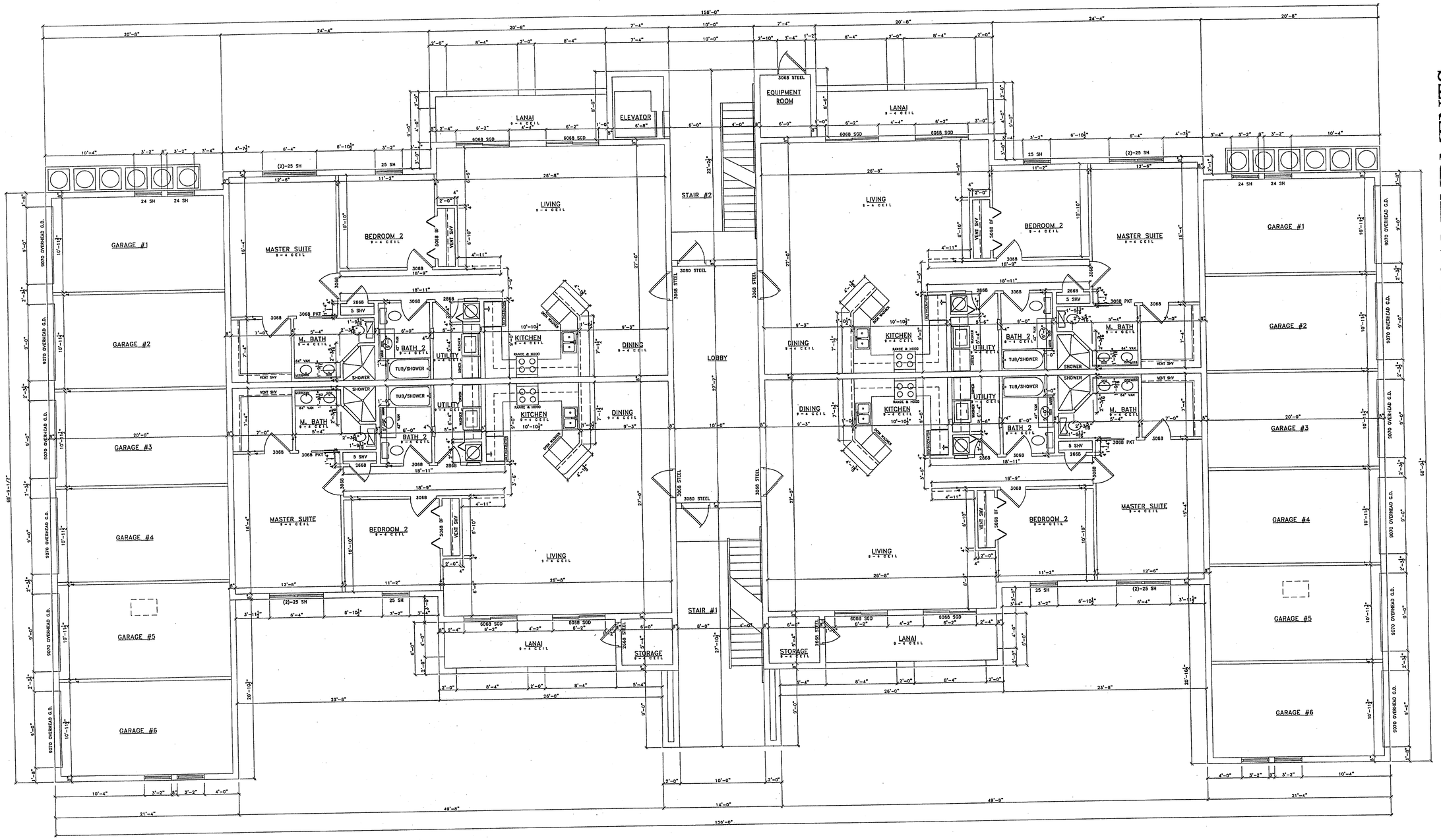

GROUND LEVEL AREA TABULATION		
LIVING	1,392 SF EA. UNIT	5,568 SF TOTAL
STORAGE	44 SF EA. SIDE	88 SF TOTAL
LANAI	124 SF EA. UNIT	496 SF TOTAL
EQUIPMENT ROOM		59 SF TOTAL
ELEVATOR		59 SF TOTAL
LOBBY		289 SF TOTAL
STAIR 1 & 2		501 SF TOTAL
GARAGE	1,436 SF EA. SIDE	2,872 SF TOTAL
TOTAL:		9,932 SF BUILDING TOTAL

PROPOSED GROUND FLOOR PLAN

3/16" = 1'-0"

PRELIMINARY NOT FOR CONSTRUCTION

2004 F.B.C. W/ 2006 AMENDMENTS

LAKES OF ESTERO

CONIDARIS DEVELOPMENT

Matrix
ENGINEERING & DESIGN, L.L.C.
C.A. # 00001876
25435 WEST NEWBERRY ROAD
NEWBERRY, FL 32669
PH: 352.474.6330 FAX: 352.474.6331

NOT FOR CONSTRUCTION

Charles A. Wolfe, P.E.
Reg. No. 46032
Date:

DRAWN JAE
CHECKED --
DATE 07/31/08
SCALE -
JOB NO. E-02408
SHEET 5 OF 7 SHEETS

IF ANY ERRORS OR OMISSIONS EXIST IN THE DRAWINGS AND SPECIFICATIONS, THE CONTRACTOR SHALL WITHIN 10 DAYS AFTER THE RECEIPT OF THESE PLANS AND PRIOR TO CONSTRUCTION NOTIFY THE DESIGNER IN WRITING OF SUCH ERRORS OR OMISSIONS, OR BE HELD RESPONSIBLE FOR THE RESULTS AND COST OF RECTIFYING THE SAME.

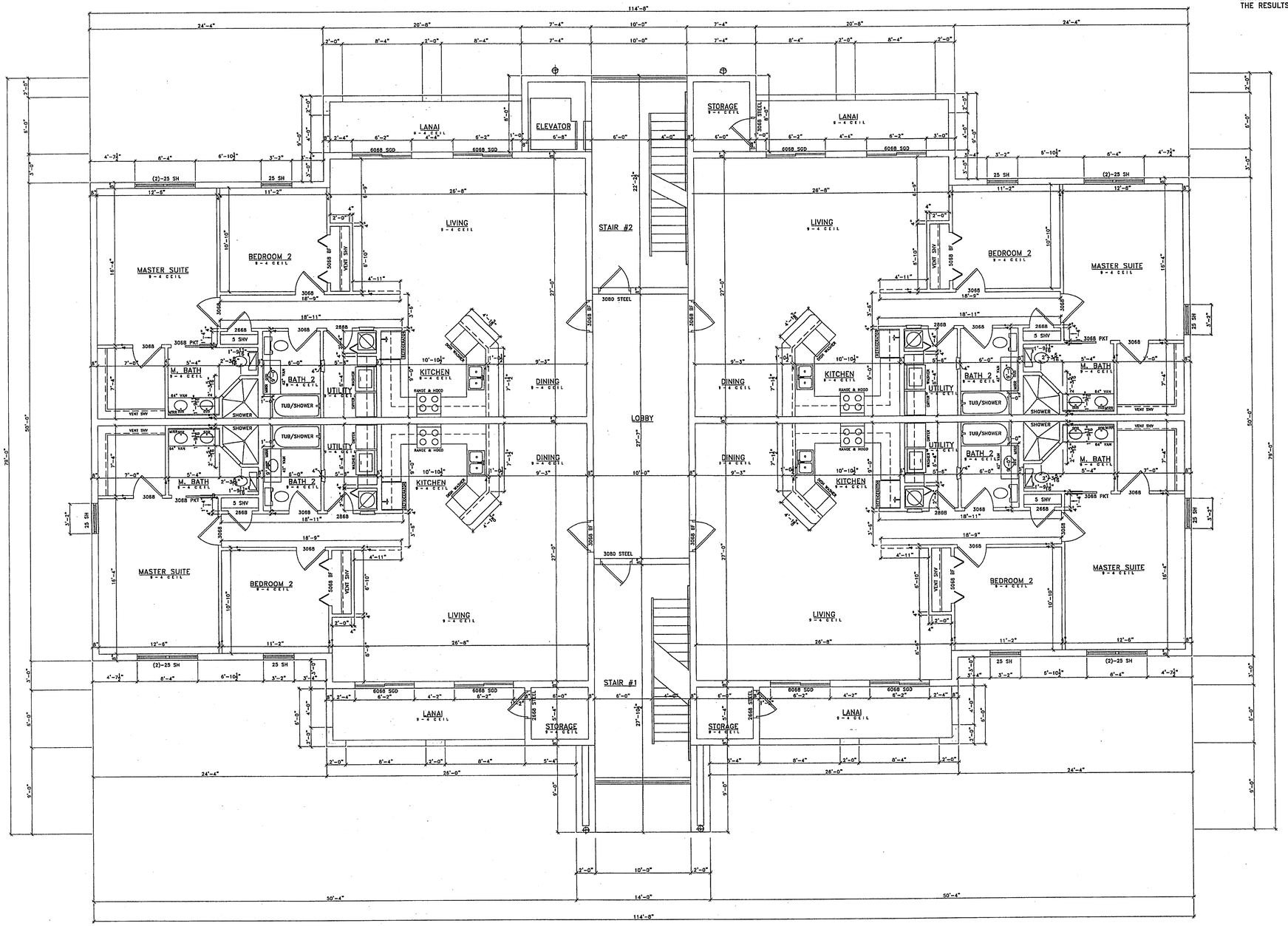

SECOND LEVEL AREA TABULATION		
LIVING	1,392 SF EA. UNIT	5,568 SF TOTAL
STORAGE		147 SF TOTAL
LANAI	124 SF EA. UNIT	496 SF TOTAL
ELEVATOR		59 SF TOTAL
LOBBY		289 SF TOTAL
STAIR 1 & 2		451 SF TOTAL
TOTAL:		7,010 SF BUILDING TOTAL

PROPOSED SECOND FLOOR PLAN

3/16" = 1'-0"

PRELIMINARY NOT FOR CONSTRUCTION

COMMENTS	BY
08-05-08	JAE

2004 F.B.C. W/ 2006 AMENDMENTS

LAKES OF ESTERO

CONIDARIS DEVELOPMENT

Matrix
ENGINEERING & DESIGN, L.L.C.
C.A. # 0000876
25435 WEST NEWBERRY ROAD
NEWBERRY, FL 32669
PH: 352.474.6330 FAX: 352.474.6331

NOT FOR CONSTRUCTION

Charles A. Wolfe, P.E.
Reg. No. 46032
Date:

DRAWN	JAE
CHECKED	--
DATE	07/31/08
SCALE	-
JOB NO.	E-02408
SHEET	6 OF 7 SHEETS

IF ANY ERRORS OR OMISSIONS EXIST IN THE DRAWINGS AND SPECIFICATIONS, THE CONTRACTOR SHALL WITHIN 10 DAYS AFTER THE RECEIPT OF THESE PLANS AND PRIOR TO CONSTRUCTION NOTIFY THE DESIGNER IN WRITING OF SUCH ERRORS OR OMISSIONS, OR BE HELD RESPONSIBLE FOR THE RESULTS AND COST OF RECTIFYING THE SAME.

COMMENTS	BY
08-05-08	JAE

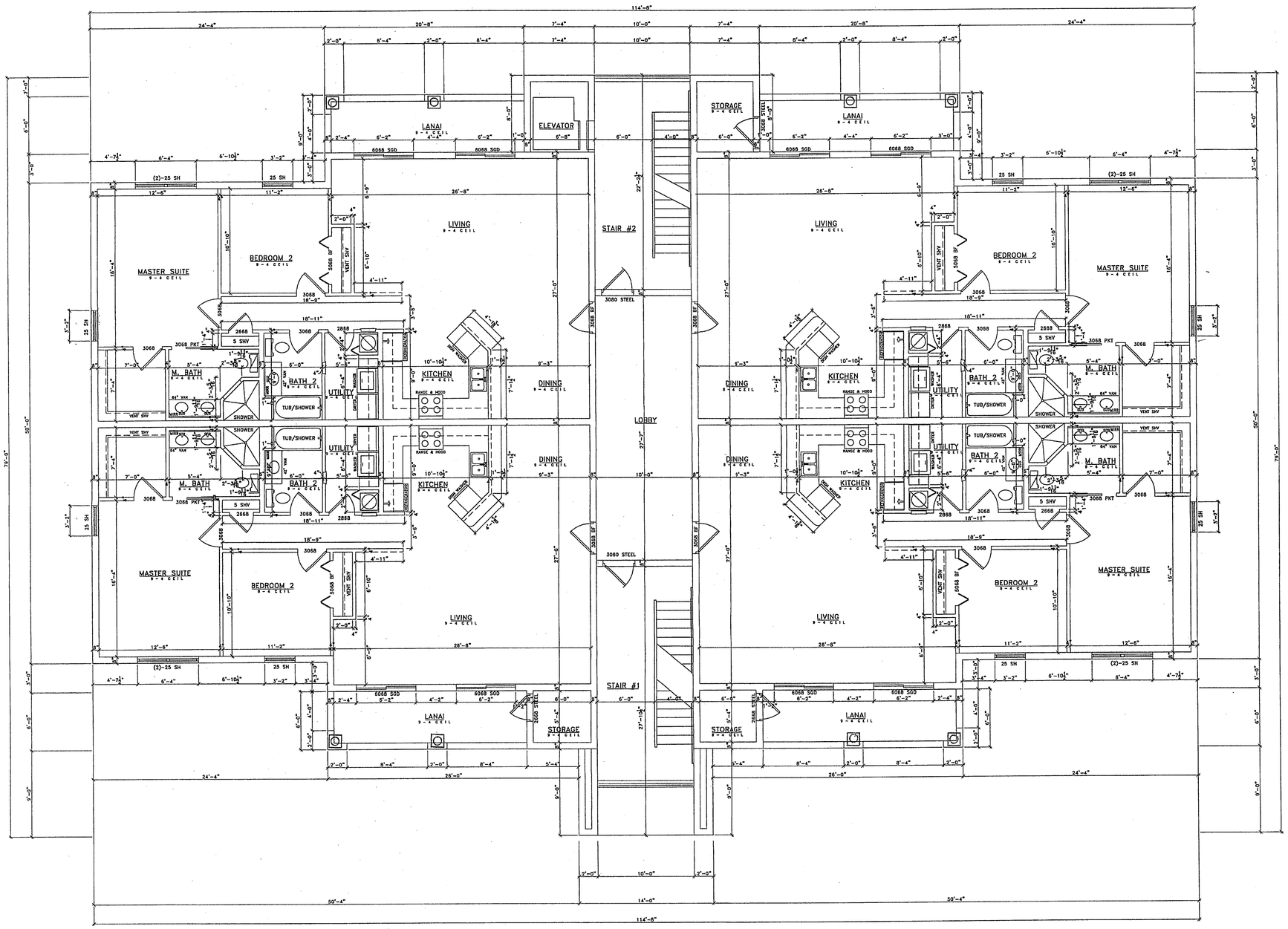

THIRD LEVEL
AREA TABULATION

LIVING	1,392 SF EA. UNIT	5,568 SF TOTAL
STORAGE		147 SF TOTAL
LANAI	124 SF EA. UNIT	496 SF TOTAL
ELEVATOR		59 SF TOTAL
LOBBY		289 SF TOTAL
STAIR 1 & 2		451 SF TOTAL
TOTAL:		7,010 SF BUILDING TOTAL

PROPOSED THIRD FLOOR PLAN

3/16" = 1'-0"

PRELIMINARY NOT FOR CONSTRUCTION

2004 F.B.C. W/ 2006 AMENDMENTS

LAKES OF ESTERO

CONIDARIS DEVELOPMENT

Matrix
ENGINEERING & DESIGN, L.L.C.
C.A. # 00001876
25435 WEST NEWBERRY ROAD
NEWBERRY, FL 32669
PH: 352.474.6330 FAX: 352.474.6331

NOT FOR CONSTRUCTION

Charles A. Wood P.E.
Reg. No. 46036
Date:

DRAWN	JAE
CHECKED	--
DATE	07/31/08
SCALE	-
JOB NO.	E-02408
SHEET	7 OF 7 SHEETS