ORDINANCE NO. 2016 - 07

AN ORDINANCE OF THE VILLAGE OF ESTERO, FLORIDA ADOPTING AMENDMENTS TO CHAPTERS 33 AND 34 OF THE VILLAGE OF ESTERO TRANSITIONAL LAND DEVELOPMENT CODE; COMBINING CHAPTER 33, ARTICLES I AND II; UPDATING CHAPTER 33, ARTICLE II, DIVISION 1 "IN GENERAL" TO REFLECT CHANGES RESULTING FROM VILLAGE INCORPORATION, ADD DEFINITIONS AND PROVIDE FOR MODIFICATIONS OF APPROVED MASTER CONCEPT PLANS; AMENDING CHAPTER 33, ARTICLE II, DIVISION 2 "DESIGN STANDARDS" TO ADD REQUIREMENTS FOR PATTERN BOOKS; AMENDING CHAPTER 33, ARTICLE II, DIVISION 3 "CORRIDOR OVERLAY DISTRICTS" TO REPEAL THE SANDY LANE OVERLAY DISTRICT AND THE US 41 OVERLAY DISTRICT AND TO AMEND THE CORKSCREW ROAD OVERLAY DISTRICT; AMENDING CHAPTER 33 TO CREATE DIVISION 5 "ESTERO PLANNED DEVELOPMENT DISTRICT" AND TO PROVIDE STANDARDS AND PROCEDURES FOR APPROVAL OF LAND DEVELOPMENT AT HIGHER DENSITIES AND HEIGHTS BASED ON INCENTIVES WHEN REZONED AS A PLANNED DEVELOPMENT WITHIN THE VILLAGE CENTER FUTURE LAND USE AREA; AMENDING CHAPTER 33 TO CREATE DIVISION 6 "FRAMEWORK PLAN" TO ADOPT A FRAMEWORK FOR INTERCONNECTING STREETS FOR THE VILLAGE CENTER; AMENDING CHAPTER 33 TO REPEAL ARTICLES III – XI AS INAPPLICABLE TO THE VILLAGE; AMENDING CHAPTER 34, ARTICLE VII "SUPPLEMENTARY DISTRICT REGULATIONS" DIVISION 12 "DENSITY" TO MODIFY DENSITY EQUIVALENTS; REPEALING APPENDIX I "PLANNING COMMUNITY AND REDEVELOPMENT OVERLAY DISTRICT BOUNDARIES AND LEGAL DESCRIPTIONS" TO DELETE OVERLAY DISTRICT BOUNDARIES FOR THE SANDY LANE, CORKSCREW ROAD, AND US 41 OVERLAY DISTRICTS AND TO REPEAL PROVISIONS INAPPLICABLE TO THE VILLAGE; PROVIDING FOR SEVERABILITY; PROVIDING FOR CONFLICTS; AND PROVIDING AN EFFECTIVE DATE.

WHEREAS, the Village of Estero Charter provides that the Lee County land use development regulations, as they exist on the date of the Village incorporation, shall be the Village of Estero Transitional Land Use Development Regulations; and

WHEREAS, the Village has adopted on first reading and has undertaken review under the Florida Community Planning Act of Comprehensive Plan amendments that

would implement a walkable, mixed use regulatory framework based on preliminary concepts in the January 2015 Community Planning Initiative Final Report; and

WHEREAS, the Village has undertaken the preparation of land development regulations that will implement the aforesaid Comprehensive Plan amendments and to encourage, through development incentives, compact walkable development patterns in the area referred to in the Comprehensive Plan amendments as the Village Center; and

WHEREAS, several public workshops before the Village Design Review Board, Planning and Zoning Board and the Village Council, and a more than six month process of multiple meetings with interested stakeholders have been conducted by the Village to discuss the proposed land development regulations; and

WHEREAS, the Village of Estero Planning and Zoning Board, sitting as the Local Planning Agency, conducted a duly advertised public hearing on June 9, 2016, to hear further public input and to discuss the proposed amendments to the land development regulations, and made a recommendation to the Village Council regarding the proposed amendments; and

WHEREAS, the Village Council conducted a duly advertised first public hearing on June 1, 2016, and considered the proposed amendments to the land development regulations, including recommendations of the Village staff and comments of the public; and

WHEREAS, the Village Council finds that it is in the best interest and welfare of the Village that the proposed amendments to the Transitional Land Use Development Regulations, as contained on Attachment A and made a part hereof, be adopted.

NOW, THEREFORE, BE IT ORDAINED BY THE VILLAGE COUNCIL OF THE VILLAGE OF ESTERO, FLORIDA:

Section 1. Recitals

The foregoing "Whereas" clauses are hereby ratified and incorporated as a part of this Ordinance.

Section 2. Amendment of the Village of Estero Transitional Land Use Development Regulations.

The amendments to the Village of Estero Transitional Land Use Development Regulations as set out in Attachment A are hereby adopted. Attachment A is hereby incorporated and made a part of this Ordinance.

Section 3. Severability.

Should any section, paragraph, sentence, clause, phrase or other part of this Ordinance subsequent to its effective date be declared by a court of competent jurisdiction be invalid, such decision shall not affect the validity of this Ordinance as a whole or any portion thereof, other than the part so declared to be invalid.

Section 4. Conflict.

All sections or parts of Sections of the Code of Ordinances, all Ordinances or parts of Ordinances, and all Resolutions, or parts of Resolutions, in conflict with this Ordinance shall be repealed to the extent of such conflict upon the effective date of this Ordinance.

Section 5. Effective Date.

This Ordinance shall be effective upon adoption at second reading.

PASSED on first reading this _____ day of _____, 2016.

PASSED AND ADOPTED BY THE VILLAGE COUNCIL of the Village of Estero, Florida this _____ day of _____, 2016.

Attest: **VILLAGE OF ESTERO, FLORIDA**

By: _____ By: _____

Kathy Hall, MMC, Village Clerk Nicholas Batos, Mayor

APPROVED AS TO FORM AND LEGAL SUFFICIENCY:

By: _____

Nancy Stroud, Esq., Land Use Attorney

Vote:	AYE	NAY
Mayor Batos	____	____
Vice Mayor Levitan	____	____
Councilmember Boesch	____	____
Councilmember Brown	____	____
Councilmember Errington	____	____
Councilmember Ribble	____	____
Councilmember Wilson	____	____

LAND DEVELOPMENT CODE AMENDMENTS

Proposed by the Village of Estero
Draft, May 24, 2016

Chapter 33 – ~~PLANNING~~ ESTERO COMMUNITY REGULATIONS

~~Article I. - In General~~

Division 1. - In General

Sec. 33-1. – Transitional nature of this chapter. ~~Purpose and intent.~~

~~The purpose of~~ This chapter contains ~~is to adopt~~ the guidelines and provisions ~~a planning community believes is~~ necessary to achieve the goals, objectives and policies set forth in the ~~Lee County~~ Comprehensive Plan applicable to the Village of Estero until these provisions can be merged with the remainder of the transitional land development code adopted by the Village Charter. ~~each recognized individual planning community located within unincorporated Lee County~~. These provisions are intended to enhance, not replace, the regulations contained in the balance of this Code, unless ~~a particular planning community~~ specifically provided otherwise.

Sec. 33-2. – Reserved. ~~Applicability.~~

~~The following articles apply to the planning communities in unincorporated Lee County that are specifically identified in the Lee Plan. Each article covers an individual planning community, or specifically identified portion of a planning community, that has chosen to pursue adoption of standards for the particular community.~~

Sec. 33-3. – Reserved. ~~Effect of LDC provisions~~.

~~Development within the planning communities affected by this chapter must comply with all Lee County regulations, including the provisions of this Code. The planning community regulations are intended to supplement regulations in this Code, unless a particular planning community specifically provides otherwise.~~

Sec. 33-4. - Conflict.

A conflict between the provisions of this chapter and the balance of this Code will be resolved in accordance with the following. The provisions of the Comprehensive ~~Lee~~ Plan in effect at the time of the conflict is discovered will control. If the Comprehensive ~~Lee~~ Plan is silent with respect to the issue, then the standards articulated in this chapter will control over any conflicting provisions in the balance of this Code. If the Comprehensive ~~Lee~~ Plan and this chapter are silent with respect to an issue, then the provisions within the balance of this Code will control.

Sec. 33-5. - Deviations/variances.

Deviations and variances from these provisions ~~set forth in each article~~ may be achieved under the standards specifically set forth in this chapter and pursuant to the ordinances of the Village of Estero ~~by the particular planning community~~. If this chapter or such ordinances ~~the article~~ do not contain a specific provision related to variances and deviations, then the relevant provisions in chapters 10 and 34 will apply.

Sec. 33-6. - Appeal.
Appeal of the application or interpretation of this chapter must be filed and processed in accord with ~~section 34-145(a)~~ the ordinances of the Village of Estero.

Secs. 33-7—33-50. - Reserved.

~~Article II. - Estero Planning Community~~

Division 1. - In General

Sec. 33-51. - Purpose and intent.

The purpose of this chapter ~~division~~ is to create standards for growth in ~~the~~ Estero ~~Planning Community (see map in Appendix I), described in Goal 19 of the Lee County Comprehensive Plan~~. Specific high growth corridors may be designated as overlay districts and/or contain special regulations. ~~subject to the provisions of this subdivision.~~ The policies contained within this chapter ~~article~~ are intended to encourage mixed-use developments, interconnectivity, pedestrian activity, and to achieve and maintain a unique, unified and pleasing aesthetic/visual quality in architecture, landscape architecture, site planning, and signage throughout Estero. Except as otherwise specifically set forth below, the standards in this chapter Article ~~II~~ apply to all development, including, without limitation, commercial, religious, institutional, and mixed use buildings within ~~the~~ Estero, except for individual single-family or two-family residential structures. ~~Community, except where the authority of a separate political jurisdiction supersedes county authority~~.

Sec. 33-52. - Applicability.

(a) ***Scope.*** The provisions of ~~Article II~~ this chapter apply to all development located in the ~~Estero Planning Community~~ Village of Estero~~, as defined in section 33-53(a) and Goal 19 of the Lee Comprehensive Plan~~, except for individual single-family or two-family residential structures.

(b) ***Development orders.*** The provisions of this chapter ~~article II~~ apply to all development orders including, without limitation, all limited review development orders described in section10-174 ~~10-174(1), 10-174(2) and 10-174(4)a~~. that are requested within ~~the~~ Estero ~~Planning Community~~. Compliance with these provisions will be required in order to obtain development order approval.

(c) ***Demonstrating compliance.*** Compliance with the standards set forth in this chapter ~~article~~ must be demonstrated on the drawings or site development plans submitted in conjunction with an application for development order approval or with a building permit application if a development order is not required. This will not prevent simultaneous applications for a development order and building permit on the same parcel, however, the development order approval must precede the building permit approval.

Sec. 33-53. – Reserved. ~~Planning community boundaries.~~

~~(a) ***Estero Planning Community.*** The boundaries of the Estero Planning Community are as depicted in the Lee County Comprehensive Plan on Lee Plan Communities Map 16.~~
~~(b) ***Corkscrew Road Overlay.*** The boundaries of the Corkscrew Road overlay district are as depicted in Appendix I on Map 1.~~
~~(c) ***Sandy Lane Overlay.*** The boundaries of the Sandy Lane overlay district are as depicted in Appendix I on Map 1~~
~~(d) ***US 41 Overlay.*** The boundaries of the US 41 overlay district are as depicted in Appendix I on Map 2.~~

Sec. 33-54. - Community review.

The owner or agent applying for Planned Developments, Rezonings, Variances, Special Exceptions, Plan Amendments, and Development Orders within the Village of Estero must participate in a public information meeting pursuant to the Ordinances, regulations and policies of the Village of Estero to provide a general overview of the project for any interested citizens before the application can be found sufficient. Prior to a finding of sufficiency, the applicant must provide the Village with a summary of the concerns or issues that were raised at the meeting and a proposal for how the applicant will respond to any issues that were raised.

~~(a) ***Applications requiring review.*** The owner or agent applying for the following types of county approvals must conduct one public informational session in accord with section 33-54(b) within the Estero Planning Community prior to obtaining a finding of sufficiency.~~
~~(1) ***Development orders.*** This includes all applications for development orders requested within the Estero Planning Community.~~
~~(2) ***Planned development zoning actions.*** This includes administrative deviations amending the approved master concept plan or other provisions of the applicable zoning resolution.~~
~~(3) ***Special exception and variance requests.*** This includes all requests that will be decided by the hearing examiner.~~
~~(4) ***Conventional rezoning actions.***~~
~~(5) ***Permanent monument-style identification*** sign permits requested from the Building Department.~~
~~(b) ***Meeting requirements.*** The owner or agent submitting the application requiring review under this section must conduct one public informational session within the boundaries of the Estero Planning Community where the agent will provide a general overview of the project for any interested citizens. The applicant is fully responsible for~~

~~providing the meeting space and providing security measures as needed. Subsequent to this meeting, the applicant must provide county staff with a meeting summary document that contains the following information: the date, time, and location of the meeting; a list of attendees; a summary of the concerns or issues that were raised at the meeting; and a proposal for how the applicant will respond to any issues that were raised.~~

Sec. 33-55. - Existing development.

Existing planned developments may voluntarily bring a master concept plan into compliance with the Comprehensive Plan ~~Estero Plan~~ or any regulation contained in this chapter division administratively. No public hearing will be required if the sole intention is for existing planned developments to comply with these regulations.

Sec. 33-56. - Definitions.

The following definitions are in addition to those set forth in other chapters of this Code and are applicable to the provisions set forth in this chapter ~~article~~ only. If, when construing the specific provisions contained in this chapter ~~article~~, these definitions conflict with definitions found elsewhere in this Code, then the definitions set forth below will control. Otherwise the definitions contained elsewhere in this Code will control.

Articulation means shapes and surfaces having joints or segments that subdivide the area or elements; the joints or members add scale and rhythm to an otherwise plain surface.

Big box/large retail/large footprint means a single use retailer of more than 50,000 square feet of building footprint, or a multi-use development, with more than 100,000 square feet of building area, excluding out parcel development.

Building footprint means the total area of land covered or occupied by an individual building, including all roofed areas and outdoor sales area. Walkways and public spaces are excluded from the calculation.

Column/pillar means freestanding vertical supports that generate unique features through the composition of the base, shaft and capital arrangement of column parts.

Facade means the vertical exterior surfaces of a building.

Fully shielded light fixture means a light fixture constructed in such a manner that all light emitted by the fixture, either directly from the lamp or a diffusing element, or indirectly by reflection or refraction from any part of the luminaire, is projected below the horizontal.

Human scale and proportion means the adequate positioning of building details and attributes that take into consideration the approximate eye level and average human

height, in order to create a sense of its presence, or simply for it to be perceived and appreciated when encountered.

Intensity means the extent to which land is being used. It is an indication of the amount and degree of development in an area and a reflection of the effects generated by that use. Without limiting the generality of the foregoing, *Intensity* is usually measured in relationship to customarily non-residential uses based on the amount of use, size, impact, bulk, shape, height, coverage, utilities and energy demand, traffic generation, and floor area ratios.

Increases in Intensity shall refer to a significant or substantial increase in the intensity of the land use for a particular parcel which could reasonably be determined to adversely impact neighboring or surrounding land uses or is otherwise detrimental to the public welfare. Shifts of types of uses, or conversion of uses from one type of use to another, within the same planned development, which do not increase overall intensities of the development may still be deemed Increases in Intensity base on the foregoing standards. For purposes hereof, an increase in the intensity of a parcel by ten percent (10%) or more in any of the measurements mentioned in such definition shall be deemed to be an *Increase in Intensity*.

Interior access drive/street means any vehicular roadway, excluding alleys or driveways, located within the confines of the property.

Internal block means a building pad that does not front on a major road.

Liner building/structures means additional buildings located along a big box type structure to mask blank and unadorned walls. Liner buildings may also be used to help mass up or mass down the big box. Liner buildings may either be attached to the big box or be within 15 feet of the big box. (See Figure 11 in section 33-458) Liner buildings may either be an enclosed, partially enclosed, or a covered structure, including covered walkways.

Mall means a structure with multiple tenants with an internal public circulation spine (roofed or not roofed) with more than 450,000 square feet of retail space.

Monument sign or monument-style sign is a ground sign, the structural base of which is on the ground. The height of the base must be at least 24 but no more than 36 inches above the adjacent ground. The average width of the sign structure must exceed the total height of the sign structure. The width of the top of the sign structure must not exceed 120 percent of the width of the base. The sign copy area will be measured from the outside edges of the sign or the sign frame, whichever is greater, excluding the area of the supporting structures provided that the supporting structures are not used for advertising purposes.

Reflective pool means a geometric pool like structure with a minimum of six inches of water and a maximum of two feet of water in the structure. Reflective pools may not be connected to the water management system.

Open space square means an outdoor common space. Open space squares must have a minimum average dimension of 30 feet and a maximum average dimension of 65 feet. Open space squares may be interconnected to form a larger square or a series of squares and must be integrated into the pedestrian circulation pattern for the project. Open space squares must also be located in the front or middle of the center.

Out parcel buffer means building parcels that are placed along more than 75 percent of the public right-of-way, having no more than two rows of parking in the front, and a landscaped buffer (type "D," minimum of six feet) provided at the front, back and the sides of the out parcel. Properties sharing common buffers may agree to install a joint buffer, at least eight feet in width, provided the buffer meets all type "D" buffer requirements, and includes three trees per 100 linear feet. When a building is located in the Corkscrew Road overlay area, a setback of no more than 20 feet from the Corkscrew Road right-of-way may satisfy the front landscaping requirements.

Parapet means a low protective wall at the edge of a terrace, balcony or roof.

Parking pods means a discrete parking lot with no more than four ingress/egress points, limited to a maximum of 120 parking spaces, and surrounded by a type "D" landscape buffer.

Pedestrian passageway means a pedestrian connection between buildings that allows safe access to other public spaces.

Pole sign is a freestanding sign composed of a single, double, or multiple pole or support structure, that is not a solid monument-style.

Storefront means the wood or metal armature of a window or door system, located within a ground-floor opening in the facade of a building.

Street furniture means objects that are constructed or placed above ground such as outdoor seating, kiosks, bus shelters, sculptures, tree grids, trash receptacles, fountains, and telephone booths, which have the potential for enlivening and giving variety to streets, sidewalks, plazas, and other outdoor spaces open to, and used by, the public.

Usable open space means a passive or active area set aside for the visitor enjoyment while adding to the diversity of the activities at the center.

Vernacular means building structure whose design is determined by an informal local tradition. A vernacular building is one that possess attributes common to other buildings in the region in terms of appearance, use of materials, dimensions, exterior

decoration and approximate age. While there may be differences in attributes, it should "belong" and not seem out of place.

Sec. 33-57. – Deviations, Administrative Actions, and variances.

If an applicant desires to deviate from any of the provisions of this chapter, including all of the guidelines, and standards thereof, including, without limitation, the architectural, site design, landscaping or signage guidelines in this ~~Article II~~ chapter, ~~including all sections from 33-111 through 33-385~~, an applicant may do so at the time of zoning or development order if permitted under the Ordinances of the Village of Estero, section 34-268, and section 10-104(b) in the manner set forth below. A rendered drawing to scale, showing the design, and clearly demonstrating the nature of the requested deviation must be submitted as part of the development order application. ~~Administrative deviations to a planned development may be allowed subject to a meeting within the Estero Planning Community in accord with section 33-54(b).~~

Under this chapter, and pursuant to Village of Estero Ordinance 2015-01, administrative amendments under section 34-380, administrative variances under section 34-268, and administrative deviations under section 10-104 shall be determined in accordance with the following:

(a) Under section 10-104, with respect to all applications for administrative deviations other than administrative deviations with respect to height of buildings and structures, all references to the "Development Services Director" or the "Director" shall mean the Village of Estero Design Review Board ("DRB") acting pursuant to its powers and the procedures set forth under Estero Ordinance 2015-01, as amended (the "Ordinance").

(b) Under sections 34-380 and 34-268, with respect to all requests for administrative amendments to master concept plans and requests for administrative variances, including requests for deviations relating to the height of buildings and structures, all references to the "Director" shall mean the Village of Estero Planning and Zoning Board ("PZB") acting pursuant to its powers and the procedures set forth under the Ordinance.

Secs. 33-58—33-99. - Reserved.

Division 2. - Design Standards

Sec. 33-100. - Design standards.
The design standards included in this division are intended to help create a distinguished architectural style and appearance within ~~the~~ Estero ~~Planning Community and the specific overlay districts identified in section 33-53~~. The standards provide design criteria intended to stimulate creative project designs, while fostering compatibility with surrounding developments.

These development provisions are intended to create an integral distinct community image, one that will enhance, unify, and harmonize properties throughout ~~the~~ Estero ~~Planning Community~~.

Secs. 33-101—33-110. - Reserved.

Subdivision I. - Basic Elements

[no changes to Subdivision I]

Subdivision II. - Architectural

[no changes to Subdivision II]

Subdivision III. - Landscaping

[no changes to Subdivision III]

Subdivision IV. - Transportation

[no changes to Subdivision IV]

Subdivision V. - Signs

[no changes to Subdivision V]

Subdivision VI. – Pattern Book

Sec 33-391. – Pattern books generally.

A pattern book describes the anticipated visual character and layout for a development project and can also illustrate proposed signage, landscaping, and other features. The pattern book then guides the design and construction of buildings and site improvements. Pattern books have become an Estero tradition, beginning in 2004 with the Coconut Point design review guidelines.

Sec 33-392. – Purpose and intent.

(a) An effective pattern book illustrates the design and character of a development project and provides details about design solutions to conditions that are specific to the site or to the target market. Pattern books assist village officials and the community during the rezoning process in visualizing how a development project would fit into the community, how its character would be unified internally, and to what extent it would implement policies in the Estero Community Plan and the standards in this chapter.

(b) The level of detail in a pattern book will vary based on the scale, scope, and timing of a development project and on the standards that apply.

(1) For larger developments equal to or in excess of ten (10) acres, and developments that will be phased over time, the pattern book identifies the placement of development features on a site, particularly those along the perimeter; defines the layout of proposed development in relationship to neighboring uses, adjacent streets, and public spaces; and depicts generalized architectural themes for buildings.

(2) For smaller developments, less than ten (10) acres, single-phased developments, and higher density and intensity projects such as those subject to pattern book requirements under Division 5 of this chapter, the pattern book incorporates more information such as general façade detailing, cross-sections of streets, and details on signage, landscaping, lighting, open space, and other features.

Sec 33-393. - Applicability.

(a) With respect to all planned development zoning applications as of the date of the effectiveness of the amendment of this Sec. 33-393, the Village of Estero requires that a pattern book to be submitted as part of applications for planned development zoning. Compliance with the pattern book is a condition of such rezoning.

(b) By itself, an approved pattern book does not overrule any Village regulations. However, where specific variances or deviations are requested as part of a zoning application, the details of those requests should be illustrated in the pattern book so that subsequent approval of those variances or deviations can be referenced to the pattern book.

Secs. 33-393—399. - Reserved.

Division 3. - Corridor Standards
~~Overlay Districts~~

Sec. 33-400. - Purpose and intent.

~~Overlay districts are~~ Certain corridors within ~~the~~ Estero ~~Planning Community that~~ are of special concern and require special site design standards.

Sec. 33-401. - Applicability.

Whenever the requirements of Division 3 ~~the overlay districts~~ impose a different standard than the provisions of the remainder of this Code, the requirements of Division 3 ~~the overlay district~~ will govern. Except where specifically modified by the provisions of this ~~sub~~division, all other requirements of this Code apply.

Subdivision I. - Corkscrew Road Overlay ~~and Sandy Lane~~

Sec. 33-402. - Intent.

The Corkscrew Road ~~and Sandy Lane~~ overlay districts will be developed as ~~the Estero Planning Community's Main Street,~~ a corridor of architecturally appealing and attractively landscaped retail, office, residential and institutional developments that cater to the needs of the community. The boundaries of this district are depicted in **Figure 33-402.** ~~These districts are depicted in Appendix I, Map 1.~~

Sec. 33-403. - Corner lots.

In addition to the requirements of section 10-620(c)(3), the development must create visually attractive street corners using distinctive building entryways in combination with landscaping or artwork. Buildings on corner lots must be designed with a maximum setback of 25 feet from each adjacent right-of-way and must provide pedestrian access from the street intersection (Refer to Figure 9).

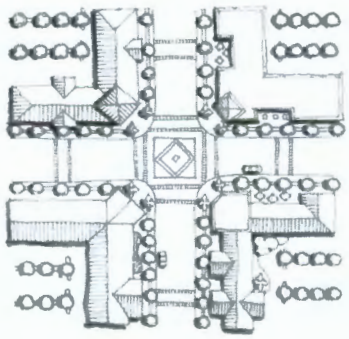

Figure 9. (s. 33-403)

Sec. 33-404. - Areas of public interest.

The development must be designed to create people-oriented spaces along the street that are visually attractive, take into consideration the human scale and proportion, and provide for pedestrian connections.

Sec. 33-405. - Street front activity.

The development must be designed to create public spaces to allow for activity to take place along the street front, such as sidewalks and open areas.

Sec. 33-406. - Property development regulations.

Setbacks for the Corkscrew Road overlay district ~~and Sandy Lane Overlay Districts~~ are shown in the following **Table ~~1~~ 33-406**. With the exception of setbacks set forth within **Table ~~1~~ 33-406,** the property development regulations set forth in section 34-935 will apply. **Table ~~1~~ 33-406** specifically modifies and supersedes the provisions set forth in Section 34-935(b)(1).

To ensure conformity and development consistent with the goals and requirements of this section, developments that were approved prior to June 25, 2002, as part of a planned

development, must also comply with the setback requirements contained in **Table ~~1 33-406~~** to the extent the setback requirement was not specifically addressed as part of the planned development. Specific property development regulations that were approved as part of a planned development prior to June 25, 2002, are exempt from this section.

Table ~~1~~ 33-406			
Dimensional Regulations	Special Notes	Corkscrew Road ~~& Sandy Lane~~ Overlay Districts	
Setbacks[1]	34-2191 et seq.	Minimum	Maximum
Street (feet)[2]		0′	25′
Side yard (feet)[3]		0′	N/A
Rear yard (feet)		25′	N/A
Water body (feet)		25′	N/A

Notes to Table 33-406:

(1) Building setback requirements must follow these General Requirements (See Figure 2, s. 33-113):
   a. Setbacks will be established to facilitate the creation of uniform streetscape.
   b. Maximum right-of-way setbacks will be zero feet to 25 feet. This must allow for buildings to front directly onto the adjacent sidewalks, while providing for slight undulation (variety) in the definition and character of the corridor. The flexibility in this setback will also allow for the creation of small use areas (i.e. limited outdoor seating for restaurants and coffee shops, display of goods being sold, and small landscaped entrances) and enhance opportunities for activity. Automobile service stations and convenience food and beverage uses with fuel pumps may deviate from the maximum setback requirement per landscape requirements in section 33-435. Interior lots are permitted for developments provided that there is a minimum 75-foot setback for all parking lots.
   c. Minimum of 40 percent of the building frontage will be required at the setback.
   d. These setback requirements do not apply to properties fronting Corkscrew Road east of I-75.

(2) The provisions of section 34-3131(a) "Vehicle Visibility at Intersections" is amended for the purposes of the Corkscrew Road ~~and Sandy Lane~~ overlay districts to read as follows:

   Corner lots. On a corner lot, no obstruction may be planted or erected that materially obstructs traffic visibility within the triangular space bounded by the two intersecting right-of-way lines and a straight line connecting the two points on the street right-of-way lines 50 feet from their intersection. No structural and planting masses will be permitted between one and one-half feet and eight feet above the average grade of each street.

(3) Developments are encouraged to provide side setbacks of five feet or less to create a continuous "street wall" of building frontage where possible. Where side setbacks are less than five feet, evidence must be presented that the landowner will be able to maintain the exterior wall. The exterior walls of buildings must meet fire protection standards.

Secs. 33-407—33-420. - Reserved.

Subdivision II. - US 41

Sec. 33-421. - Intent and scope.

~~The~~ US 41 overlay district will continue to grow as a commercial and residential corridor over the next decade, providing for the regional and local shopping needs of Estero and South Lee residents. The Village wishes ~~purpose of the overlay district is~~ to create a corridor that is well landscaped and aesthetically pleasing while providing for a free flow of traffic through Estero ~~South Lee County~~. The following regulations aim to create a roadway corridor that enhances the drive through experience of traveling through Estero; these regulations apply to all new development and redevelopment that abuts US 41. ~~the Estero Planning Community.~~
The US 41 Overlay is depicted on Appendix I, Map 2.

Sec. 33-422. - Parking lots.

(a) Freestanding buildings or shopping center developments containing 7,500 gross square feet of space or less may provide no more than 20 percent of parking areas in the front of buildings and/or be limited to no more than one double row of parking. No more than 20 percent of the parking area may be located to the side of building, with the balance of parking located to the rear of the building.

(b) For buildings exceeding 7,500 square feet, and fronting US 41, parking is encouraged to the sides or rear of the building.

(c) Where parking is located adjacent to US 41, adequate screening, consisting of a minimum type "E" buffer, as specified in section 33-351, containing a two to three foot undulating landscaped berm, without a wall, is required. The intent is to screen parking areas but not buildings.

Secs. 33-423—33-430. - Reserved.

Division 4. – Specific Uses

Subdivision I. - Automobile Service Stations and Convenience Food and Beverage Stores

[no changes to Subdivision I]

Subdivision II. - Big Box Commercial

[no changes to Subdivision II]

DIVISION 5. – ESTERO PD ZONING DISTRICT

Sec. 33-501. – Estero Planned Development Zoning District.

(a) This land development code contains two zoning districts that encourage land in the Village Center Area to be developed or redeveloped with a greater mix of uses and higher densities when placed in walkable mixed-use patterns. One district is Compact Planned Development as described in Chapter 32 of this code. The other is the Estero Planned Development zoning district ("Estero PD") as described in this division.

(b) The Estero PD district contains tiered standards that apply to the Village Center Area. Landowners may apply for rezoning to have these new standards and densities applied to specific tracts of land.

Sec. 33-502. – General Criteria.

The general criteria for the Estero PD district are as follows and will apply in all Tiers, as defined below. These general criteria set out the defining principles used to create the

standards for the Estero PD district and provide the rationale to be followed with respect to any rezonings or other applications for development in such district. Wherever issues arise in such rezonings or other applications, which are not specifically determined by the Estero PD district standards, the general criteria shall be applied. As part of the approval process with respect to a rezoning or other application for development in the Estero PD district, the Village Council, or the applicable land use board under the Ordinances of the Village of Estero, shall make a written finding as to whether, and to what degree, such application is consistent with these General Criteria.

(a) **Goals**. The specific goals set forth in the Comprehensive Plan for the Village Center Area include creating socially vital centers supportive of business both big and small, neighborhoods and streets that are safe and attractive for walking and bicycling, the preservation of community history, and the protection of the environment, particularly along the Estero River.

(b) **Reasonable Standards**. The provisions of the land development code implementing the Estero PD district are designed as reasonable standards to foster predictable built results and higher quality public spaces by using physical form (rather than separation of uses) as the organizing principle for achieving the goals and objectives set forth in the comprehensive plan relating to the Village Center Area. Such standards designate the requirements for the required pattern books, the locations where different building form standards apply, the relationship of buildings to the public space, public standards for such elements in the public space as sidewalks, bicycle lanes, automobile travel lanes, on-street parking, street trees, street furniture and other aspects of the urban built environment that may be applicable to foster interconnection, social vitality, and walkability in the Village Center Area. Such standards also permit other reasonable means that may accomplish the goals and objectives of the comprehensive plan in a different or complementary manner by the Village's ability to grant deviations or variances from the standards set forth herein in circumstances where the strict application of the standards will not best achieve the goals underlying such requirements.

(c) **Accessibility**. The criteria implementing the Estero PD district for the Village Center Area are designed to make the public space accessible, both socially and physically, connected, and walkable. Such guidelines (a) are based on the primacy of the human scale over the automobile, (b) are designed to balance private property interests and property rights with public goals, and (c) enjoy simple, understandable, and physically determined methods to achieve these goals.

(d) **Streets**. In these criteria, the street becomes the key part of the public space. All streets must in some way become a part of a connected, continuous street network, which are designed to encourage the mixing of uses in the Village Center Area. A variety of different types of streets, which connect neighborhoods and destinations, will serve the public interest by minimizing the traffic load and the need for increased capacity on any one street. Except as specifically set forth in these guidelines, streets shall not end in dead ends, cul-de-sacs, hammerheads, or other forms which do not connect with other streets.

(e) **Street Design**. Distances between intersections of streets should favor the goals and objectives of enhancing walkability of streets and connectivity. The design of streets shall favor their proper use by pedestrians; where the guiding principle is to calm traffic and to specifically slow traffic at intersections to allow pedestrians to cross streets quickly and safely. Landscaped medians and two-way streets help to achieve these goals and objectives by reducing the apparent width of streets and providing safer crossings. On-street parking, where appropriate and feasible, protects pedestrians from the actual and perceived danger of moving traffic.

(f) **Lots and Blocks**. The proper application of the principles regarding connectivity of streets will then create a network of streets which will result in blocks of land and differing lots within such blocks. Rather than to specify a particular grid of lots and blocks, which may differ within the Tiers, the guidelines for the Estero PD district will be flexible to allow for variations in the size and dimensions of lots and blocks so long as the overall objectives for connectivity and walkability are achieved on a performance-based standard. However lots or blocks may be ultimately designed, the sides will form a part of the public space and will be defined by the types and varieties of streets that surround them. By way of example, alleys can absorb parking and service loads, and allow the outer faces of blocks to become more intensely pedestrian in nature. Within the blocks that are created by the streets, a variety of widths and depths of individual lots will determine the range of building types and densities that will eventually establish the intended urban fabric of the Village Center Area.

(g) **The Visual Edge**. The sidewalks, setbacks, building facades and other characteristics of the visual edge of the public street are also important features under the standards for the Estero PD district. The height of the buildings, setbacks and projections define the enclosure of the street. The maximum width and height of buildings define a building's mass, while the architectural features of the building, especially the interrelationship of the design and the public space, will ultimately determine the social vitality of the street. So too are the characteristics of built form and landscape design, which are deemed to be mutually dependent.

(h) **Architecture**. Architectural variety of buildings and unique approaches to design and structure are to be valued under the standards for the Estero PD district, however, equally important is the fact that adjacent buildings and public spaces that share some of the characteristics of its neighbors will generate a sense of cohesive framework in the Village Center Area.

(i) **Quality of Buildings**. Buildings are like permanent fixtures in the landscape of the Village. They should be constructed with sufficient material and of such high technical quality to allow for their continuing renovation and adaptive reuse well beyond the expiration of their initial planned use or cost recovery. These guidelines shall also favor individual buildings which are ecologically sensitive in their use of materials, particularly recyclables, and with respect to their energy demands.

Sec. 33-503. – Applications and procedures.

Application requirements and approval procedures for the Estero PD district will be the same as for other planned development rezonings except that the master concept plan will be replaced by a tiered development plan as follows:

(a) In place of designating "individual development areas" as required by section 34-373(a)(6)d, the development plan must indicate the connecting street network and proposed tier designations:

(1). The development plan must show the proposed configuration and location of the connecting street network, including the connection points along the perimeter and the routes between those points (see section 33-508(b)).

(2). The development plan must indicate that all land will be initially designated to be in Tier 1, and may indicate that certain portions of the land will also be in Tier 2, or Tier 3.

(3). The development plan must show additional streets behind and between pad sites or out parcels where these streets are required by section 33-508(d).

(4). For land in Tier 1 only, the development plan must show any additional streets that are planned as connecting streets, as such term is defined below in section 33-508(b).

(5). For land in Tiers 2 or 3, the development plan must show the location of all proposed streets and indicate the classification of streets as described in section 33-508(a).

(b) Mixes of complementary uses of land are encouraged within the Estero PD district. The development plan must indicate the proposed uses of land in each tier using the requirements in section 34-373(a)(8). If the development plan includes pad sites or out parcels along major roads, the proposed uses on those sites must also be indicated.

(c) The development plan must demonstrate compliance with the additional standards in this Division 5.

Sec. 33-504. – Tiers.

(a) This division provides standards for four levels of development that will contribute to a walkable mixed-use environment in the Village Center Area:

(1) ***Tier 1*** provides a minimum network of connecting streets that will allow the public to move by car, bike, or on foot within and through development tracts.

(2) ***Tier 2*** accommodates residential neighborhoods with higher densities and a potential for a greater variety of housing types, as well as mixed-use neighborhoods with higher levels of non-residential uses, and, in each case, greater connectivity than Tier 1.

(3) ***Tier 3*** accommodates mixed-use neighborhoods with similar attributes as Tier 2 but with significantly greater non-residential uses as well.

(4) ***Tier 4*** allows an entire development tract to be planned as a compact community, as provided in Chapter 32.

(b) Applications for the Estero PD district must designate at least Tier 1 for the entire property being rezoned. Applications may also request Tier 2 and/or Tier 3 on top of Tier 1 for portions of the property specified on the development plan. Tiers 2 and 3 can comprise entire compact neighborhoods or can be applied in smaller increments as parts of other neighborhoods. See examples of potential tier arrangements in **Figure 33-504(b)**. Applicants seeking Tier 4 must demonstrate the entire property being rezoned complies with Chapter 32.

(c) The provisions in Policy 19.8.4 of the comprehensive plan regarding vested rights, and the procedure for determining such vested rights, shall be utilized in circumstances under this Division, where a property owner is unclear as to the exact nature of the vested rights that are claimed. Rezoning approvals for the Estero PD district will not force the reduction in the overall number of dwelling units allowed by an unexpired master concept plan for the same tract and will not nullify any conditions of the original density grant. However, notwithstanding the foregoing sentence, such rezoning approvals may require the reconfiguration of streets, individual development areas, access points for connecting streets or other local streets, preserve areas, and other site plan details.

Sec. 33 – 505. - Maximum residential density.

(a) Residential densities are established within each tier with respect to a proposes development plan by the Village Council during the rezoning process. These density levels must be within the density ranges in the comprehensive plan (see Policy 19.8.7).

(1) For land in Tier 1-only, densities are measured in dwelling units per gross residential acre of Tier 1-only land, as density is defined in the glossary of the comprehensive plan.

(2) For land also in Tiers 2 or 3, or entirely in Tier 4, densities are measured in dwelling units per gross acre for each entire tier, including non-residential land in that tier.

(b) Maximum residential densities for land in each tier are as follows:

TABLE 33-505

	Base Densities if all requirements are met:	*Additional Densities if all requirements are met and incentive offers are accepted as providing significant public benefits:*
Tier 1	*Up to 6*	*6.1 to 9*
Tier 2	*up to 10*	*10.1 to 14*
Tier 3	*up to 15*	*15.1 to 20*
Tier 4	*up to 21*	*21.1 to 27*

(c) During the rezoning process, the Village Council, among other determinations, may reduce the residential densities listed above, with respect to either the Base Densities or Additional Densities, if the proposed project does not meet all of the requirements of these guidelines to its satisfaction, or if significant deviations are requested from essential requirements upon which the allowable density increases in this zoning district are sought, or if the incentive offers that are proposed do not provide significant public benefits.

Sec. 33-506. – Maximum building height

(a) Building heights in this zoning district are measured the same as for all other development in Estero.

(b) Maximum building heights for land in each tier are as follows:

TABLE 33-506

	If all requirements are met:	If all requirements are met and incentive offers are accepted as providing significant public benefits:
Tier 1	45 feet	45 feet
Tier 2	50 feet	55 feet
Tier 3	60 feet	65 feet
Tier 4	70 feet	75 feet

Sec. 33 – 507. - Pattern books.

Section 33-393 of this code requires rezoning applications to include a pattern book that illustrates the anticipated visual character of new development including its architecture and landscaping. All applications for the Estero PD district, except for those in Tier 4, must include a pattern book that meets the requirements listed below for the respective tier. A pattern book is optional but recommended for Tier 4 applications. The following standards for pattern books required under this Division 5 apply to specific tiers. Where there are direct conflicts with another provision of this code, these standards will apply.

(a) **Tier 1 Pattern Books:**

Pattern books for land proposed only for Tier 1 are not as detailed as pattern books for higher tiers. Pattern book contents for areas designated for Tier 1 development must include at least the following to demonstrate consistency with (or identify deviations or variances from) the standards outlined in this division.

(1) Illustrative colored site plan on an aerial photo that depicts:

a. Configuration and phasing of all connecting streets, streets behind/between pad sites or out parcels, and other planned local streets, along with all access points from adjoining streets, as shown on the development plan, with cross-sections for each.

b. Bicycle/pedestrian circulation including connections to adjoining property.

c. Landscaped areas, preserved areas, open spaces, civic spaces, gathering places, natural and cultural resources, and community facilities, where applicable.

d. Water management areas (conceptual).

e. Development areas, labeled with approximate acreages and with proposed uses.

(2) Conceptual architectural elevations that depict generalized architectural theme or themes that will be characteristic of the primary façades of buildings throughout the development plan, and including a proposed color palette.

(3) Landscaping and open space plan with typical buffer planting detail.

(4) Where pad sites or out parcels are to be developed separately, provide a plan with detailed examples, figures or photographs that indicates what unifying themes will be common to those sites (architecture, signage, landscaping, etc.).

(5) For land adjoining the Estero River, provide a map showing the top of the riverbank, and the regulatory floodway designated on the official flood maps adopted into Chapter 6 of this code. Depict the proposed setback of buildings and land alterations from the top of the riverbank, and the location of all proposed buildings and land alterations within 200 feet of the river.

(6) For tracts, blocks, or parcels where access would be controlled for security, provide a plan diagram that shows what land would have controlled access, the proposed method and extent of access control along with the features thereof, and architectural elevations that depict the appearance of the controlled area from the outside of such parcel. The access plan diagram should also show the layout of the vehicular, pedestrian, and bicycle network, the proposed operation of the access control features, and the proposed locations of sidewalks, trails, bicycle paths, drives, streets, fencing, gates and walls and their role in the security for such areas.

(b) Tier 2 and Tier 3 Pattern Books.

All of the Tier 1 standards for pattern books are applicable in Tier 2 and Tier 3 as well. In addition to the underlying Tier 1 standards, the following standards apply to Tier 2 land and Tier 3 land:

(1) On the illustrative site plan, provide the following additional information:
a. Location, shape and size of proposed detention and retention areas.
b. Location and size of development tracts, labeled with approximate acreages and with proposed uses.
c. Location and cross-sections of streets, sidewalks, and off-street facilities for walking or biking.
d. A three dimensional diagram or rendering that shows the scale and massing of buildings proposed in each development tract.
e. Location and size of common parking areas.
f. Location and approximate size of lots.

(2) Provide typical façade detailing for buildings that will be visible from streets.

Sec. 33 – 508. – Streets and Street Appurtenances.

Pursuant to the General Criteria set forth in Sec. 33-502, under these guidelines the street becomes the key part of the public space. The goal with respect to streets is to incentivize the creation of a variety of different types of streets, which can connect neighborhoods and

destinations, serve the public interest by minimizing the traffic load and the need for increased capacity in any one street. The following guidelines will apply in the Estero PD district:

(a) Public vs. Private Streets.

The public versus private nature of a street can vary. The following street classification is used in the Estero PD district:

(1) TYPE A: a *public street* that will be owned and maintained by the Village of Estero. Type A (public streets) must be dedicated to and accepted by the Village of Estero.

(2) TYPE B: a *semi-public street* that will be privately owned and maintained through a recorded easement which grants the general public the right to travel by motor vehicle, bicycle, and by foot. Type B streets will not be dedicated to the Village of Estero. The semi-public nature of these streets must be indicated on the plat and memorialized on such recorded easement:

(2) TYPE C: a *private street* that may or may not be accessible to the public; an easement for public use is not required. Type C will be privately maintained, and the private nature of these streets must be indicated on the plat.

(b) Connecting Streets.

(1) Connecting street(s) are local streets, most of which will not carry significant traffic volumes. An example of connecting street patterns is shown on **Figure 33-508(b)**. Sidewalks and regularly spaced street trees are required on both sides of connecting streets.

(2) The Framework Plan described in division 6 (**Figure 33-601**) identifies the approximate points where connecting streets in the Estero PD district must connect with surrounding streets (existing and future). The proposed internal alignment of connecting streets must be shown on the development plan and must provide reasonably direct routes to such connections.

(3) For development sites smaller than 10 acres, the connecting street must be constructed during the initial development phase.

(4) For development sites larger than 10 acres, construction of the connecting streets may be phased, provided the development plans propose a phasing plan acceptable to the Village that includes guarantees that the connecting street network will be fully constructed.

(5) Developers may propose a variety of different types of local streets in addition to connecting streets and streets behind/between pad or outparcel sites, however, except as specifically provided in Subsection (b)(2) below, all streets must form a part of a

connected, continuous street network, and shall not end in dead ends, cul-de-sacs, hammerheads or other forms which do not connect with other streets.

(c) Street standards.

(1) Typical cross-sections of connecting streets are shown on **Figure 33-506 (c)** and are to be followed in all of the Tiers with respect to such streets. Variations of such cross-sections may be allowed by deviation depending on the uses along such streets and as long as the provisions of the General Conditions are met, including without limitation, the goals of connectivity and walkability.

(2) Where required connecting streets or other local streets terminate at the rail corridor or other places where through passage cannot be provided at the time of development application, right-of-way for the street must be provided to the edge of the development tract and the street must be temporarily terminated with a cul-de-sac or hammerhead turnaround in accordance with Chapter 19 of the *Florida Greenbook* (latest edition as published by Florida DOT). The developer is not obligated to obtain permission to cross the rail corridor or to extend a street across property owned by other parties, but the developer and successor owners must allow these streets to be connected at such time as connections become feasible.

(3) Connecting Streets in all of the Tiers must be either a Type A Public Street or a Type B Semi-Public Street. The determination to accept a dedication of a street as a Type A public street shall be made solely by the Village. Streets behind/between pads or outparcels must be Type B Semi-Public streets. All other local streets may be either Type B or Type C Private Streets as determined during the rezoning process.

(d) Streets for Pad or Outparcel Sites.

(1) Development plans may propose pad or outparcel sites along arterials and collectors for free-standing buildings, including commercial and mixed-use buildings. Pad sites may initially accommodate highway-oriented uses in the immediate future so long as they are configured in such a way as to not preclude future redevelopment at higher intensities in a compact walkable form.

(2) The following street requirements apply when pad or outparcel sites are proposed:

a. A parallel street (or reverse frontage road) must be provided immediately behind these sites to provide access to and from connecting streets and to integrate these sites with their surroundings.

b. A short perpendicular street must be provided between the arterial or collector road and the parallel street so that there are a reasonable number of access points to such parallel street so as to asssure the walkability of such street and enhance connectivity, provided that such access points are otherwise allowable by the governmental agency which owns and maintains such arterial or collector roads.

(3) See also section 33-512(c)) which provides visible edge standards for pad sites.

(e) Utilities along Streets.

(1) Development plans should indicate the general location of utility lines so that utility easements can be coordinated in a manner that minimizes the impact of utility lines on landscaping and street trees. Where allowed, deviations may be requested from general standards in the land development code for utility easements if needed to allow the proposed placement of utilities.

(2) When alleys or rear lanes are provided, they are the preferred location for "dry" utility lines such as electricity, telephone, cable television, and fiber optic cables. The rights-of-way of local streets are the preferred location for "wet" utility lines such as water and wastewater.

(3) Above-ground utility lines are prohibited in the Estero PD district.

Sec. 33-509. – Lots and Blocks.

The overall size and dimensions of lots and blocks in the Village Center Area have a direct impact on the connectivity of the streets. Developments in the Estero PD district shall have reasonable flexibility in determining the size and dimensions of both lots and blocks within their developments. Rather than specify particular sizes or dimensions for lots and blocks, these standards will allow variations in such forms as long as the overall goals and objectives for connectivity and walkability are achieved. Based on the connectivity requirement set forth in Sec. 33-508 above, which requires that all connecting streets and other local streets connect into a network of streets, the result will be lots and blocks of land with differing sizes and dimensions. Such lots and blocks will be surrounded by some form of network of public streets, some of which will be Type A Public Streets or Type B Semi-Public Streets as set forth in Sec. 33-508(a).

(a) Based on the connectivity of the streets, developable land in Tier 1 will be divided into blocks. Each block may be surrounded in whole or in part by a publically accessible street. The streets surrounding such blocks may be straight, curved, or bent.

(b) Best practices for block perimeters in the Village Center Area will not exceed 2,000 linear feet in Tier 1 or 1,600 linear feet in Tiers 2 or 3, in each case as measured along the inner edges of each surrounding street.

(c) However, best practices for block perimeters may be as large as 2,400 linear feet in Tier 1 or 2,000 feet in Tiers 2 or 3, where the following conditions are present:

(1). One side of the block faces an arterial or collector street or a railroad;

(2). The block contains or is bordered by a river, natural flow-way, wetlands, or indigenous plant community that is being preserved; or

(3). The block contains a lake or shared amenities for residents of that block.

(d) In Tier 2 and Tier 3, blocks are encouraged to be subdivided with rear lanes or alleys to provide access to parking, service areas, and utilities. Block perimeter measurements are not affected by the presence of rear lanes or alleys in a block.

(e) The best practices for block perimeters are to be viewed as goals to be attained where reasonable and feasible, given the nature of the flexible approach to lots and blocks set forth above.

Sec. 33 – 510. – Indigenous Plant Communities and the Estero River Buffer.

(a) Indigenous plant communities.

(1) Chapter 10 of this code requires large developments to preserve a portion of the indigenous plant communities that exist on their sites.

(a) Developments requesting the Estero PD district must indicate on their development plans the extent to which the indigenous cypress, oak, and cabbage palm plant communities that were on the site when the Village of Estero incorporated will be preserved. The Village of Estero shall maintain a map of such indigenous plant communities as of December 31, 2014.

(b) Primary preservation areas are those with the densest indigenous plant communities, those nearest to the Estero River, and those with the closest association with the historic Koreshan Unity settlement and its National Register Historic District.

(c) Such preserved indigenous plant communities may be counted toward the 50 percent preservation requirement in section 10-415(b).

(d) Failure of the development plan to preserve a reasonable number of such indigenous plant communities may be grounds for the Village to reduce the proposed base residential density under such development plan.

(b) Estero River buffer.

(1) For land adjoining the Estero River, buildings and land alterations must maintain a separation area from the river. The minimum separation area is the larger of the following:

a. The full width of the regulatory floodway designated on the official flood maps adopted into Chapter 6 of this code; or

b. From the top of the river bank, 75 feet on the north side and 100 feet on the south side.

(2) Indigenous plant communities may not be cleared within the separation area except for the minimal removal necessary to allow the placement of recreational structures such as docks, boat launches, benches, trails, and pedestrian bridges, or for the minimal removal necessary to construct a required connecting street.

Sec. 33 – 511. – Surface Water Management.

(a) Development plans must arrange surface water management facilities to minimize impacts on connectivity and walkability. This can be accomplished in many ways, including, without limitation, by having a connecting street or pedestrian way go across larger lakes, by reducing the size of individual lakes, by placing lakes where passage is already constrained by adjoining uses such as the rail corridor, or similar arrangements designed to be supportive of connectivity and walkability.

(b) Development plans must provide a unified surface water management system for at least the entire tract and should anticipate water management needs for future intensification anticipated for the site.

(c) In Tier 2, development plans are encouraged to include deviations from the surface water management standards in Chapter 10 in order to minimize the amount of land devoted to lakes and channels. Best practices for compact surface water management include pervious or permeable paving to reduce storm water runoff and steeper slopes or a higher percentage of bulkheads along lake banks.

(d) In Tier 3, best practices for compact surface water management include the same methods as in Tier 2, but also may include storm water detained underground or other advanced methods as may be feasible.

(e) The best practices for compact surface water management are to be viewed as goals to be attained where reasonable and feasible. In Tier 2 and Tier 3, where deviations may be encouraged to accomplish compact surface water management goals, developers must make reasonable efforts where feasible to seek and achieve similar deviations with regards to permitting requirements of South Florida Water Management District.

Sec. 33 – 512. – Visible Edges.

(a) The edges of development tracts can be critical transitions between private and public space. Where these edges adjoin streets accessible to the general public, buildings must present an attractive public face that contributes to public life and activity in the Village Center Area. One of the most important goals set forth in the General Criteria in Sec. 33-502 is to create public spaces along streets which enhance and incentivize the social vibrancy of the Village Center Area. The guidelines set forth herein are designed to achieve such goals.

(b) **Tier 1**. The following standards apply to the visible edges of development tracts that are nearby and visible from a connecting street or a collector road:

(1). Wherever feasible, buildings must have their principal street facade along the visual edge of such connecting street or collector road. The uninterrupted building length (or combined attached group of buildings) cannot exceed such a length as to create

an unreasonably long façade which is either unarticulated, minimally unarticulated, or would become unattractive from a visual perspective along such connecting street or collector road. Illustrations of reasonable and proper placement of buildings on lots are found in **Figure 32-242(a) – (g)**, which are incorporated herein as requirements in all of the tiers.

(2). Private parking spaces and lots must be located behind the building and may be accessed by a street, driveway, alley, or lane; these accesses may be secured with a operable metal gate if the gate's structure is not unreasonably opaque so as to become a visual barrier to the view from the connecting street or collector road.

(3). Building entrances must be clearly visible from and directly accessible from the connecting street. The number of building entrances and the design of single or common entrances for single-family or multifamily or non-residential buildings must be reasonably related to the number of separate facilities in such building and must be visually pleasing along the connecting street or connector road. The design for such entrances and any walls between the building and the connecting street or collector road must be shown in the Pattern Book relating to the appropriate Tier.

(4). Medium height solid walls or fences, not in excess of approximately 3.5 feet tall, may secure space between buildings, but must be contiguous with, and not project beyond, any adjacent building's front façade unless part of an exterior courtyard entrance.

(c) **Pad or Outparcel Sites.** The following standards apply to the visible edges of development tracts that are designated as pad or outparcel sites (see section 33-508(d):

(1). Buildings must be oriented to the parallel street and have at least one entrance in each building clearly visible from and directly accessible from the parallel street.

(2). Service and/or back-of-house functions may not be located between the building and the parallel street without provision for reasonably adequate screening and landscaping so that such functions are not visible from the parallel street.

(3). Pad or outparcel sites along an arterial or collector road must comply with all provisions of Sec. 33-51 through 33-477, including, without limitation, Sec. 33-337.

(d) **Tiers 2 and 3**: Visual edges along connecting streets and other local streets in more intense areas take on increasing importance because more activity takes place outside of vehicles. In addition to the visual edge standards set forth in Subsections (a) and (b) above, the following visible edge standards apply in Tier 2 along the edge of all connecting streets and other local streets:

(1). Buildings must have their principal street facade within a reasonably close distance from the appropriate edge of the street. For connecting streets, if feasible, a reasonably close distance from the street and the pedestrian sidewalk along such connecting street would in any event not be greater than 120 feet, and would be designed to both mitigate building massing along the public space but also to create a more urban environment. For other local streets, such reasonably close distance, where feasible, would likely be nearer to the street and sidewalk, perhaps as close as 20 feet. There is no designated maximum building length; however reasonably appropriate articulation of the

mass and form of buildings is required to prevent such building from being unattractive from a visual perspective along such street.

(2). Private parking spaces and lots must be located behind the building and be visually buffered from the street. Parking may be accessed by a street, driveway, alley, or lane; these accesses may be secured with a operable metal gate if the gate's overall opacity is not unreasonably opaque so as to become a visual barrier to the view from the street.

(3). Building entrances must be clearly visible from and directly accessible from the street.

a. One entrance must be provided for each single-family detached and attached dwelling.

b. At least one common entrance must be provided for each multifamily and non-residential building unless units have individual entrances.

(4) Building entrances may open directly to the sidewalk or indirectly through a secure raised dooryard or exterior courtyard that is separated from the sidewalk by a medium height solid wall, not in excess of approximately 3.5 feet tall, which wall may also include an open metal fence up to a few feet in additional height, where overall wall and fence does not exceed approximately 6 feet in height.

(5) Medium height solid walls not in excess of approximately 3.5 feet tall may secure space between buildings but must be contiguous with, and not project beyond, any adjacent building's front façade unless part of an exterior courtyard entrance.

Sec. 33 – 513. – Tier 1 General Standards.

(a) **Use**. Except as otherwise limited hereby, development plans may propose any type of residential development in Tier 1 land that is allowed in the Village Center land use category and otherwise permissible by this land development code. The development plan must specify the proposed residential uses. In addition, only minimal non-residential uses may be proposed for Tier 1 land, and such non-residential uses must be entirely complementary and accessory to the proposed residential uses.

(b) **Tier 1- Only**. The following rules will apply to all Tier 1-only land. For purposes hereof, Tier 1-only land is that portion of the overall development parcel which is designated as Tier 1 and where Tier 2 or 3 has not been designated on top of Tier 1:

(1). The total number of dwelling units approved for Tier 1 land may be constructed only on Tier 1-only land and must meet the following requirements:

a. These dwelling units must be concentrated on no more than fifty percent (50%) of the Tier 1-only land.

b. The remaining fifty percent (50%) of the Tier 1-only land must be used for open space, surface water management, or held for potential future development in Tier 2 or Tier 3.

c. Land used for non-residential purposes under Tier 2 or Tier 3 will not be included in the acreage of Tier 1-only land when determining residential density as set forth in Sec. 33-505.

d. As Tier 1-only land is designated Tier 2 or Tier 3 on top of Tier 1 through a rezoning process, such land then becomes available for the development of additional higher density residential units and for non-residential development in accordance with the provisions thereof.

c). Access Control. If the development plans for a Tier-1 only residential development, as set forth in the pattern book provided with respect thereto, delineate areas where access would be controlled by fences, gates, walls and other forms of barriers to public access of such areas, including, without limitation, public access to the streets, sidewalks, trails, paths and other interconnection features of such areas, then the following standards shall apply:

(1). The nature and type of access control for such proposed residential development, the design of such access control features and how they will be seen from the connecting streets nearby such development, the distance of such access controlled areas from an arterial or collector road from the perspective of how the public on such roads will see and perceive the nature of such access control, and the factors underlying the need for such access control, particularly the specific need for security regarding such proposed development, will be reviewed and must be balanced in the rezoning process by the Village against the fact that the public will either not have access to such areas, or such access will be limited, and, as a result of such denial or limitation of access, the overall goals and objectives of the comprehensive plan, the land development code, and the General Criteria set forth in Sec. 33-502 with respect to the Village Center Area may be adversely impacted in whole or in part by the access controls under such development plan.

(2). Such a balancing test shall additionally take into consideration the size of the access controlled area as it relates to the total amount of other Tier 1 land, the proposed uses to be put to such other Tier 1 land, the uniqueness of the design of the access control features, and the other features that have been offered in the development plan to mitigate the denial or limitation of public access to such development parcel.

(3). Such a balancing test may result in a determination, among other things, that the proposed development plan may be approved, denied, or approved with conditions, or specifically would not qualify for the maximum residential densities available under the terms of Sec. 33-505.

(d). Tier 1 Land Abutting Arterial or Collector Roads.

Where development tracts abut an arterial or collector road, the overall distance between access points along such arterial or collector into and out of such development tract shall be considered as a part of the rezoning of such tract in order to make certain that a reasonable number of connecting streets are provided by such development plan so that

the distance between such connecting streets favors the walkability of streets and enhances connectivity.

Sec. 33 – 514. – Tier 2 General Standards.

In addition to compliance with the underlying Tier 1 standards set forth, the following additional standards apply to land within the Estero PD district that is also approved for Tier 2.

(a) Primarily residential neighborhoods.

(1) Tier 2 accommodates primarily residential neighborhoods that provide a variety of housing types in a walkable mixed-use pattern with higher densities and greater connectivity than Tier 1.

a. Tier 2 can comprise a small compact neighborhood or can be applied in increments as parts of other neighborhoods.

b. Development plans may include non-residential uses in Tier 2 provided they are not significant in relationship to the area of Tier 2 residential uses. This non-residential allowance can accommodate gathering places (see section 33-515(b) which are highly desirable in Tier 2.

c. Land used for non-residential purposes will be included in the acreage of Tier 2 land area when determining residential density.

(2) Development plans must indicate where Tier 2 will be located on the development tract being rezoned. Priority areas for Tier 2 are those that carry out the policies in the Estero Community Plan and which provide higher-intensity development in locations near the primary activity centers for neighborhoods.

(b) Variety of housing types.

(1) There are a variety of housing types that may be constructed in Tiers 2 and 3. These include detached houses (including cottages and side-yard houses), duplexes, apartment houses, row houses, live-work buildings, courtyard buildings, mixed-use buildings, pedestal buildings, and towers.

(2) The Village's goal is to have a significant variety of housing types in each neighborhood. To encourage flexibility, development plans are not required to identify specific housing types at the time of rezoning except that the location of buildings taller than 45 feet must be identified.

(c) Public Civic Spaces.

(1) The provision of publicly accessible civic spaces is optional in Tier 1 and is mandatory in both Tiers 2 and 3. Civic spaces must be strategically placed to encourage

public activity. Development plans must indicate the proposed type and location of civic spaces.

(2) Publicly accessible civic spaces may include greens, squares, plazas, neighborhood parks, playgrounds, community gardens, trails, nature preserves, etc. (see subsections 32-262(a) and (b)).

Sec. 33 – 515. – Tier 3 General Standards.

In addition to compliance with the underlying Tier 1 and Tier 2 standards, the following additional standards apply to land within this zoning district that is also approved for Tier 3.

(a) Greater mix of uses.

(1) Tier 3 accommodates mixed-use neighborhoods with similar attributes as Tier 2 but with significant non-residential uses. Development plans must include non-residential uses in Tier 3 at a reasonably significant level.

(2) Development plans must indicate where Tier 3 will be located on the site being rezoned. Priority areas for Tier 3 are those that carry out the policies in the Estero Community Plan and which provide the primary center of public activity for neighborhoods desirable to create social vitality. Tier 3 land is often surrounded by or a central part of Tier 2 neighborhoods.

(3) Land in Tiers 2 and 3 used for non-residential purposes will be included in the acreage of Tier 3 land area when determining residential density; land used for Type C private streets will not be included.

(b) Gathering places.

(1) The provision of publicly accessible gathering places is strongly encouraged in Tiers 1 and 2 and is mandatory in Tier 3.

(2) Development plans must indicate the proposed type and location of gathering places, which should be strategically placed to encourage activity.

(3) Gathering places allow the general public to congregate; examples include, without limitation:

a. Outdoor spaces such as parks, plazas, and farmers markets.
b. Cultural venues such as theaters and museums.
c. Civic spaces that include meeting rooms.
d. Businesses such as restaurants, coffee shops, and fitness centers.
e. Religious and social institutions.
f. Amenities adjoining sidewalks and trails such as benches, exercise stations, and gazebos.

Sec. 33-516. – Tier 4 General standards.
The additional standards described above apply to Tiers 1, 2, and 3 only. Land approved for Tier 4 must meet the standards in Chapter 32 of this land development code.

Sec. 33-517. – Architectural Diversity and High Quality Development.

(a) Architectural design and landscaping design are both seen as important to meet the General Criteria in Sec. 33-502. With respect to mixed-use areas, the ability to combine different, but compatible, uses by unified forms of architectural and landscaping design rather than by separation of uses is required.

(b) Architectural variety of buildings and unique approaches to design and structure are valued under these standards. While the design standards set forth in the Estero Community Plan and the land development plan require the developer to choose either a Mediterranean or Old Florida design for buildings in the Village, each such design standard allows for a broad palette of historical choices for developers to follow in achieving unique solutions to their individual development plans.

(c) Likewise, and of equal importance, is the compatibility of such unique building designs with surrounding properties, adjacent buildings, and the public space, so that even in their uniqueness, the development plans are encouraged to share some or more of the characteristics of their neighbors. In that fashion, new buildings will be valued if they help to generate a sense of cohesive framework in the Village Center Area.

(d) Of similar importance to the Village is the high quality of the development plans in the Village Center Area. The goal of the Village in this area shall be to create a permanency of structures that will withstand the test and rigors of our Southwest Florida climate in ways that enhance the likelihood that such buildings and other structures will outlast their initial planned use or cost recovery. In such a way, the buildings will be able to be reused or readapted for other uses, which may become market-driven in the future. This goal enhances the value of all buildings and other structures in the Village Center Area by the ability to preserve and adapt to changing economic and social needs for the future. This element of sustainability and high quality will be encouraged and valued with respect to all development plans in the Estero PD district.

(e) Similar to the requirement of high quality and sustainability of a development plan, the sensitivities of such plan to the ecology and environment in the Village is also highly valued. The ability to use materials, especially recyclables, which directly impact and reduce both the energy cost to produce such materials and the actual energy demands of the resulting building itself are to be highly valued in the Village Center Area.

(f) The overall standards for high quality development and sustainability in terms of environmental and ecological sensitivity are further advanced by the concept of incremental development in the Estero PD district. By requiring all development to be designated as Tier 1 and allowing further, more intense development with higher

residential densities and non-residential uses in Tiers 2 and 3, the Village encourages a series of development plans for the larger parcels and tracts in the Village Center Area which would occur over time on a market-driven basis. This incremental development would, over time, continue to create higher values for land remaining undeveloped in such a way as to promote a variety of compatible uses in the Village Center Area based on the changing patterns of land development. The use of high quality construction allows for adaptive reuse of buildings and adds to the incremental value of development over time, benefiting both the Village and the developers.

Sec. 33-518. – Public benefits and Incentive Offers.

(a) **Additional Densities.** Applicants requesting either the Estero PD district or the Compact Planned Development district may choose to make various incentive offers to the Village to advance the public benefits of their unique development proposals. Sec. 33-505 sets forth the maximum residential densities in each of the Tiers under the Estero PD district. These maximum residential densities include Base Densities if all requirements of the applicable Tier are met, and also Additional Densities if both all requirements of the applicable Tier are met and incentive offers are accepted by the Village as providing significant public benefits.

(b) **Village Determination.** Incentive offers in connection with rezonings or other applications in the Estero PD district are entirely voluntary on the part of applicants as a means to achieve maximum residential densities allowable under Sec 33-505 with respect to a development plan. In each case of incentive offers made to the Village, the Council shall determine whether or not such incentive offers:

(1) meet or exceed the goals and objectives of the comprehensive plan,
(2) meet or exceed the General Criteria under Sec. 33-502, and
(3) create significant public benefit commensurate with the value of such incentive offers to the Village, and the appropriateness of such incentive offers to the applicable Tier and to the particular development plan.

Such determination in shall be set out in writing by the Village as a part of its decision to rezone property to the Estero PD district (a "Determination").

As a part of the making of a Determination, with respect to the approval or denial or approval with conditions of a development plan, and to the extent allowed by law, the Village may consider a request for the granting of impact fee credits, in whole or in part, for the actual cost of incentive offers which provide for significantly high value and public benefit to the Village, and where it would not be feasible for the Village to pay or develop such a high value public benefit on its own part. As part of its Determination, the Village may also consider making public investments under its capital improvements budget, which may encourage additional incentive offers with higher public benefits and value to the Village. Such public investments could include public benefits like advanced street design, crossings for the railroad, off-street parking facilities, and other similar public

benefits. All of such impact fee credits or public investments shall be solely and exclusively the decision of the Village.

(c) **Types of Incentives**. Different types of incentive offers are described in the subsections that follow on a tier basis. The listing of a particular type of incentive offer with respect to a particular tier is not intended to require that such incentive type is limited to that tier. Instead, while incentive offers may be made with any incentives listed in any tier, the appropriateness of the incentive offer to the particular tier in question and to the particular development plan will be an important factor in a Determination to be made by the Village.

(d) **Value of Incentive Offers**. As to each different type of incentive offer, the general value to the Village in terms of public benefit as related to other listed incentives is also enumerated as a general range of value. The overall value to the Village in terms of public benefit derived from the total of all of the incentive offers shall be weighed in making a Determination with respect to the Additional Densities to be allowed with respect to a rezoning or other land use decision.

The fact that an incentive offer is not listed or enumerated as a type of incentive offer that has been valued by the Village should not be deemed to preclude consideration of other incentive offers. It is not deemed to be an exclusive list. Future incentive offers may be different variations or otherwise new types of incentives that are both appropriate and valued in terms of public benefit and shall be considered by the Village in making a Determination. Finally, within the value designation of each type of incentive, there are likely to be a range of relative values, which then impact the overall value and overall public benefit differently. By way of example, an 8' or more multi-modal path would have a significantly higher value and public benefit that a 6' bike path/sidewalk even though both types of bike/hike paths are considered as having a high value overall.

(e) **Tier 1 Incentive Offers:**

(1) Interconnectivity. (High Value) In Tier 1, the level of connectivity has the highest value to the Village in terms of overall pubic benefit. To the extent that greater connectivity is offered in excess of the requirements with respect to Tier 1 development, the applicant would increase the likelihood of receiving a favorable Determination. Likewise, in Tier 1, if the level of connectivity does not meet the requirements with respect to such Tier, the Determination may be adversely impacted in terms of meeting the requirements for both Base Densities and Incentive Densities. Examples of interconnectivity offers that have a very high value to the Village include provision for a bike/walk overpass over the railroad, bridges over the Estero River, provision of additional entrances to the Estero Community Park, solutions that increase the safety of crossing US 41, and similar solutions to needed connectivity.

(2) Preserve additional indigenous vegetation. (Low-Medium Value). Protect more indigenous habitat for properties where such habitat is present.

(3) Off-site public improvements. (Medium Value). Off-site improvements such as cross walks, protected bike lanes, protected intersections (Dutch Intersection),

landscaping of street medians, street beautification including planting strips, street hardscapes, etc.

(4) Enhanced site landscaping. (Low-Medium Value). Landscaping of the development site significantly in excess of land development code requirements.

(5) Enhanced Street Design. (Medium-High Value). Sidewalks a minimum of 6' wide on both sides of street if residential or a minimum of 8' wide on both sides of the street if non-residential.

(6) Public civic spaces. (Medium-High Value). Some level of the on-site development parcel is dedicated to public civic spaces

(f) **Tier 2 Incentive Offers.**

(1) Public hike/bike trails. (High Value). Public Hike and Bike Trails, either on or off-site, received one of the highest levels of public support in the Village.

(2) Gathering places. (Medium-High Value). See Sec. 33-515(b) for description.

(3) River trail easement. (High Value). A trail along the Estero River for properties that abut the River is seen by the public as having a very high value.

(4) Enhanced Estero River Buffer. (High Value). Incentive offers which create a wider buffer or separation area from the Estero River than required are highly valued.

(4) Site for civic building. (Medium Value). Donation of a building site for a civic building such as a transit station or village hall.

(5) Architectural Excellence/Innovation Design. (High Value). The ability to create structures of high quality both with respect to materials and design within the limitation of the land development code requirements creates lasting high value to the Village. Enhanced designs which increase sustainability and lower ecological and environmental impacts, such as buildings which meet high LEED standards, are highly valued.

(g) **Tier 3 Incentive Offers.**

(1) On-street parking. (Medium-High Value). The public benefit of broad connecting streets with traffic calming and the feeling of relative safety of pedestrians from moving vehicles created by a barrier of on-street parked cars is seen as a very highly desirable public benefit.

(2) Off-street parking. (Medium-High Value). Development plans with deviation requests for reduced parking levels which are accompanied with plans for either off-street parking or structured parking facilities, especially in non-residential areas, will be viewed as high value offers. Such plans may include requests for deviations to reduce the required parking level requirements under the land development code.

(3) Construct civic improvements. (Low-Medium Value). Development plans which offer to construct civic improvements for the Village are ranked at a lower level than other incentive offers.

(4) Off-site civic spaces. (Low-Medium Value). Construction of civic spaces off-site are seen as a lower value than on-site civic spaces.

(5) Cultural Spaces. (High Value). Offers to create or facilitate cultural activities in the Village Center Area are highly valued.

(6) Historic Preservation. (High Value). Offers to enhance historic preservation of historically significant structures, especially those near the Estero River, at highly valued.

(h) **Tier 4 incentive offers.**

(1) Vertical mixed use. (High Value). Development plans with vertical mixed use where non-residential uses such as office, retail, or dining are at the ground level and residential uses above.

(2) Other offers. Developers seeking Tier 4 may also choose any of the incentive offers listed for Tiers 1, 2, or 3.

Sec. 33-519. – Uses.

(a) **General Provisions**. In lieu of the methods for assigning land uses set forth in Division 9 of Chapter 34 of the land development code, requests for rezoning and other forms of land use determinations in the Estero PD Zoning District shall comply with the use provisions set forth in this Sec. 33-519.

(b) The uses permitted under Table 33-519(b) may be permitted in the Estero PD Zoning District when consistent with the goals, objectives, and policies of the comprehensive plan for the land use category in which the property is located, and when approved on the enumerated documentation of the master concept plan or the development plan for such property. Uses that are not specifically listed in Table 33-519(b) may also be permitted if, in the opinion of the Village, they are substantially similar to a listed permitted use.

Sec. 33-520 – Approval Process for Rezonings and other Land Use Applications in the Estero PD Zoning District.

(a) **General Provisions.**

(1) The Charter for the Village provides, in part, that all powers and duties of the Lee County Department of Community Development, the Lee County Hearing Examiner, and the Board of County Commissioners of Lee County, as set forth in the land development code, shall be vested in the Village Council until such time that the Council delegates all powers and duties, or a portion thereof, to another agency, department or entity.

(2) Pursuant to Ordinance 2015-01, the Village of Estero has created two land use boards, the Planning and Zoning Board ("PZB") and the Design Review Board ("DRB") and has delegated certain of its powers under the Charter for purposes of the land development code to such land use boards, as more specifically set forth therein. Ordinance 2015-01 specifically overrides any conflicting provisions of any ordinances of Lee County which are in conflict with any of the provisions of such Ordinance.

(3) Under Ordinance 2015-01, the PZB is empowered, among other actions, to hold hearings and to advise the Village Council on applications for rezonings. Likewise, the DRB is empowered, among other things, to approve or disapprove applications for development orders under the land development code.

(4) With respect to applications for rezoning under the Estero PD district, the DRB is hereby additionally empowered, to advise the PZB with respect to the compliance of the Pattern Book required by Section 33-507 hereof with the General Criteria set forth in Section 33-502, and as to how the development plan to be delivered in connection with such application, even at the more conceptual stage of approval for rezoning complies, with the General Criteria for the DRB set forth in Sec. 3-4 of Ordinance 2015-01. In furtherance of such advice to the PZB, the DRB shall hold a public hearing to determine such advice to the PZB, but shall not be required to hold a pubic information workshop under Sec. 3-3(3) of such Ordinance prior to or with respect to such public hearing. Such advice to the PZB shall not be deemed to affect the responsibilities of the DRB with respect to the approval, approval with conditions, or disapproval of a subsequent development order with respect to the property seeking rezoning when the plans and specifications for such development order become more specific. At such time the DRB shall again consider both the compliance with the General Criteria as set forth in Section 33-502 and its own General Criteria under said Ordinance 20i5-01.

Secs. 33-521—33-600. - Reserved.

DIVISION 6. – FRAMEWORK PLAN

Sec. 33-601. – Connecting network.

A framework plan is a schematic diagram for a network of interconnected streets, corridors, trails, and waterways that traverse development tracts. Constructing and maintaining this network, or a substantially similar network, is vital for creating a series of interconnected neighborhoods and mixed-use areas instead of isolated development projects. Figure 33-601 is the framework plan for Village Center Area.

Sec. 33-602. - Applicability.

Development plans prepared for Compact Planned Development and Estero PD district zoning requests must demonstrate their compliance with all required aspects of the framework plan, or a substantially similar network.

Secs. 33-603—33-1000. - Reserved.

~~**Article III. – Greater Pine Island**~~

~~**Article IV. - Page Park Planning Community**~~[2]

~~**Article V. - Lehigh Acres Planning Community**~~

~~**Article VI. - Matlacha Residential Overlay**~~

~~**Article VII. - Caloosahatchee Shores Planning Community**~~

~~**Article VIII. - North Fort Myers Planning Community**~~

~~**Article IX. - Captiva**~~

~~**Article X. - North Olga**~~

~~**Article XI. - Upper Captiva**~~

Chapter 34 – ZONING

Article IV. – Supplementary District Regulations

DIVISION 12. – DENSITY

Subdivision II. – Residential Development

Sec. 34-1494. - Density equivalents.

(a) **Applicability.** The density equivalents set forth in this subsection will be used in situations where it is necessary to convert permissible uses to residential dwelling unit equivalents. When permitted by the use regulations in a zoning district that permits dwelling units, the permissible density equivalents may not exceed the density limitations set forth in the zoning district or land use category (whichever is less) in which the property is located. In situations where the Lee Plan does not specify a standard density range, such as the interchange areas, the permissible density equivalents may not exceed ten dwelling units per acre.

(b) **Equivalency factors:**

(1) Where health care, social service, adult living facilities (ALF), continuing care facilities, or other "group quarters" (df) are provided in dwelling units, wherein each unit has its own cooking facilities, density equivalents will be calculated on a 1:1 ratio.

(2) Except as may be specifically set forth elsewhere in this chapter, where health care, social service, adult living facilities (ALF), continuing care facilities (CCF), or other "group quarters" (df) are provided in dwelling units or other facilities wherein each unit does not have individual cooking facilities and where meals are served at a central dining facility or are brought to the occupants from a central kitchen, density equivalents will be calculated at the ratio of four people equals one dwelling unit.

A planned development, for which the master concept plan states the number of persons that may occupy an approved adult living facility (ALF) or Continuing Care Facility (CCF), may request an amendment to the approved master concept plan to reflect the increased number of occupants based upon the equivalency factor set forth in this section (if applicable). Such amendment will be considered a minor administrative amendment

that will be deemed to not increase density and may be approved pursuant to section 34-380(b) as long as existing floor space is not increased to accommodate the increased number of occupants. If increased floor space is required, then a public hearing will be required.

(3) Notwithstanding subsection (b)(2) above, no density equivalency calculation is required for a bed and breakfast (df) in an owner-occupied conventional single-family residence (df) accommodating four or less lodgers. If the bed and breakfast will accommodate more than four lodgers, then the equivalency will be calculated as four lodgers equals one dwelling unit.

(4) Notwithstanding subsection (b)(2) above, no density calculation is required for hospital, prison, jail, boot camp, detention center, or other similar type facility owned or operated by a County, state or federal agency.

(5) Where dwelling or living units have "lock-off accommodations," density will be calculated as follows:

a. Hotels/motels: "Lock-off units" will be counted as separate rental units regardless of size.

b. Timeshare units: Lock-off units will be counted as separate dwelling units whether or not they contain cooking facilities, as follows:

i. Studio units will be counted as 0.1 dwelling units;

ii. One bedroom units will be counted as 0.25 dwelling units;

iii. Two bedroom units will be counted as 0.5 dwelling units;

iv. Three or more bedrooms will be counted as a full dwelling unit.

<u>(6) Where dwelling or living units are smaller than 750 square feet, density will be calculated by counting each unit as 0.5 dwelling units.</u>

(c) **Determination of permitted density.** The maximum permitted density shall be determined by multiplying the number of dwelling units permitted (see subsection (a) of this section) by the appropriate equivalency factor.

~~APPENDIX I - Planning Community and Redevelopment Overlay District Boundaries and Legal Descriptions~~

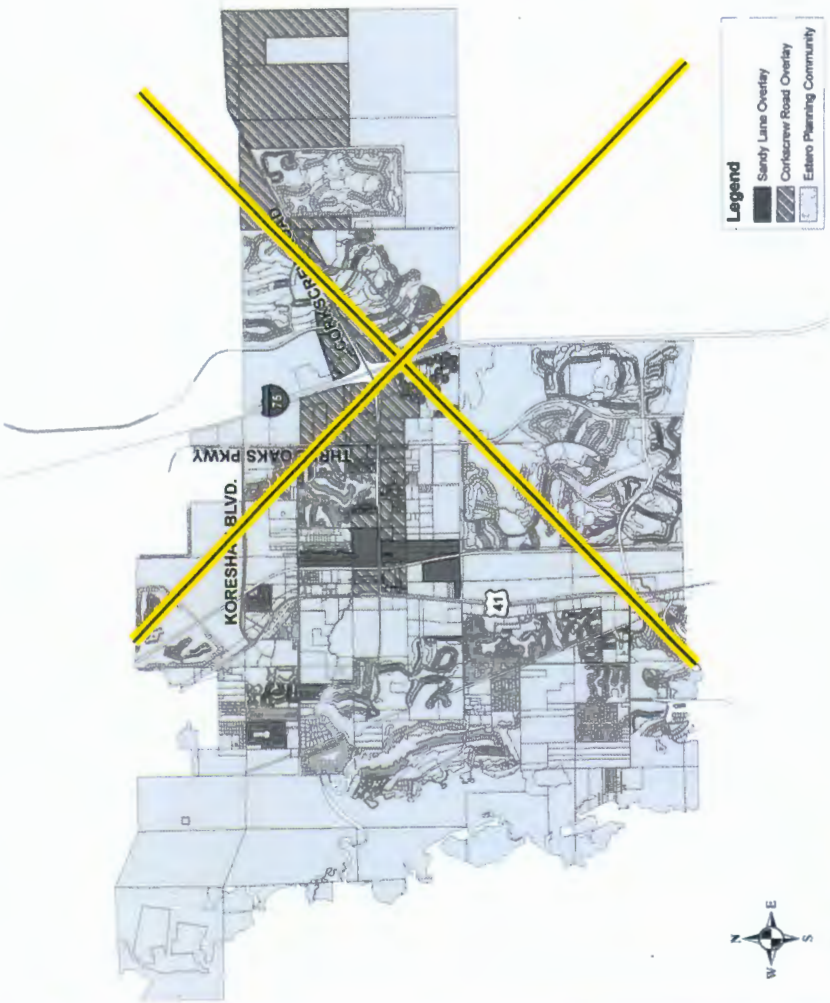

~~Map 1 - Estero Planning Community, Corkscrew/Sandy Lane Overlay~~

~~Map 2 - Estero Planning Community, US 41 Overlay~~

~~**Map 3 - San Carlos Island Overlay District**~~

~~**Map 4 - San Carlos Island Zoning Overlay**~~

~~**Map 5 - Greater Pine Island Community Plan**~~

~~**Map 6 - Page Park Community Overlay Map**~~

~~**Map 7 - North Fort Myers Planning Community, Neighborhood Center #1**~~

~~**Map 8 - North Fort Myers Planning Community, Neighborhood Center #2**~~

~~**Map 9 - North Fort Myers Planning Community, Neighborhood Center #3**~~

~~**Map 10 - North Fort Myers Planning Community, Neighborhood Center #4**~~

~~**Map 11 - North Fort Myers Planning Community, Neighborhood Center #5**~~

~~**Map 12 - North Fort Myers Planning Community, Neighborhood Center #6**~~

~~**Map 13 - North Fort Myers Planning Community, Neighborhood Center #7**~~

~~**Map 14 - Caloosahatchee Shores Planning Community**~~

~~**Map 15 - Caloosahatchee Shores Planning Community: State Route 80 Corridor Overlay**~~

~~**Map 16 - Matlacha Residential Overlay**~~

~~**Map 17 - Upper Captiva LDC Boundary**~~

LAND DEVELOPMENT CODE AMENDMENTS

DRAFT, MAY 24, 2016

EXHIBITS

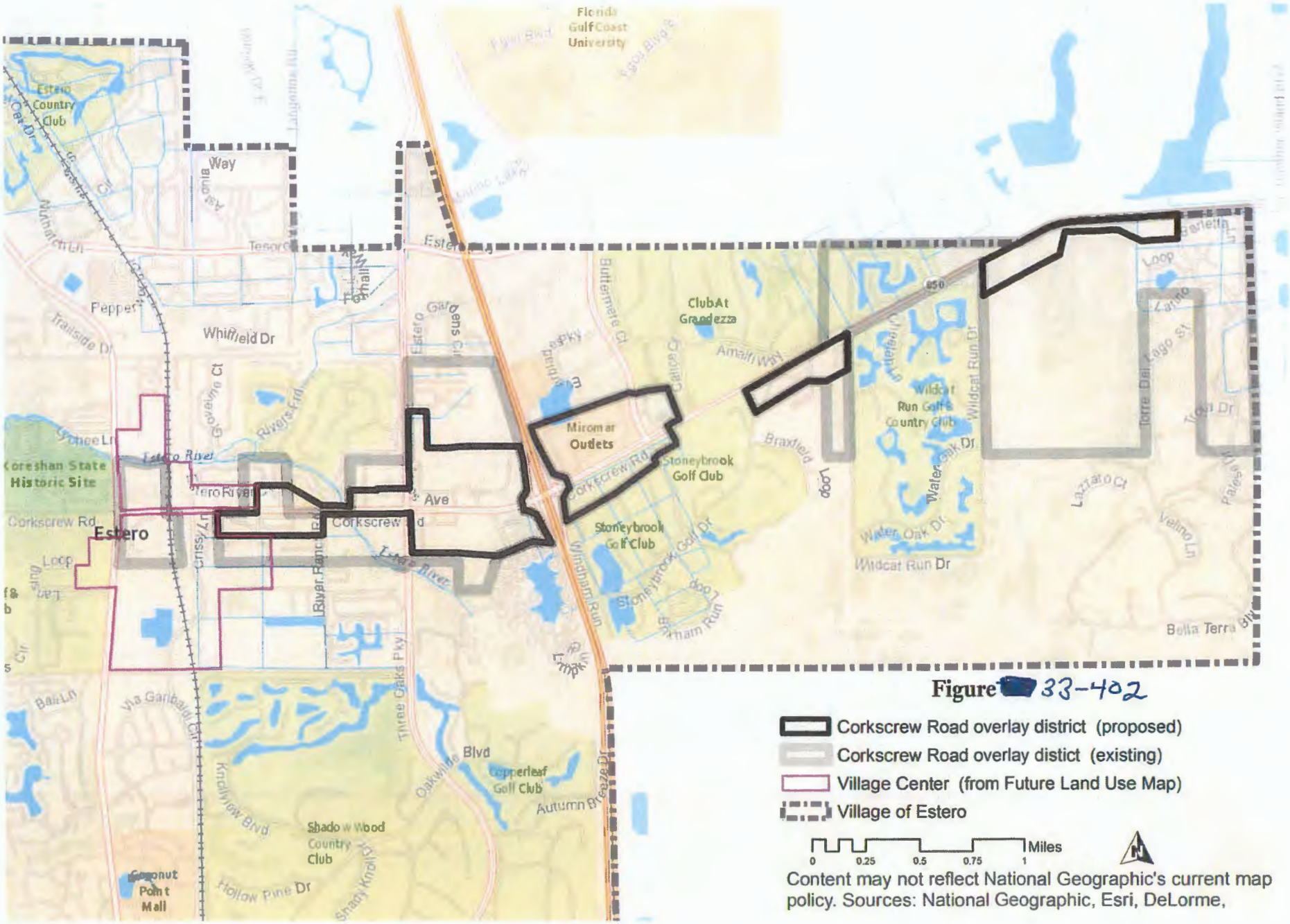
Florida Gulf Coast University
Estero Country Club
Pepper
Whitfield Dr
Trailside Dr
Coreshan State Historic Site
Estero River
Corkscrew Rd
Estero
Ave
Corkscrew Rd
Miromar Outlets
Stoneybrook Golf Club
Stoneybrook Golf Dr
Windham Run
Club At Grandezza
Amalfi Way
Braxfield Loop
Wildcat Run Golf & Country Club
Wildcat Run Dr
Water Oak Dr
Torre Del Lago St
Lazzato Ct
Velino Ln
Bella Terra Blvd
Three Oaks Pkwy
Oakwilde Blvd
Copperleaf Golf Club
Autumn Breeze Dr
Shadowood Country Club
Hollow Pine Dr
Shady Knoll Dr
Knollview Blvd
Coconut Point Mall
Via Garibaldi Cir
Bay Ln
Butterfield Ct
Cance Ct
Governor Ct
Rivers End
Yahee Ln
Crissy Ln
Buyer Ranch Rd
Estero Gardens Cir
Estero Pkwy
Tesoro Cir
Nuthatch Ln
Oak Dr
Loop
Lazzato Ct
Bartlett Loop
Lazzato Loop
Torre Del Lago St
Tiger Dr
Pilates Ln
Velino Ln
Bella Terra Blvd
Lake Ln
Windham Run
Stoneybrook Golf Dr
Loop
Corkscrew Rd
Braxfield Loop
Wildcat Run Dr
Water Oak Dr
Wildcat Run Dr
Amalfi Way
Clubhouse Pkwy
Butterfield Ct
Cance Ct
Estero Gardens Cir
Estero Pkwy
Tesoro Cir
Nuthatch Ln
Oak Dr
Pepper
Whitfield Dr
Trailside Dr
Governor Ct
Rivers End
Yahee Ln
Estero River
Coreshan State Historic Site
Corkscrew Rd
Estero
Loop
Crissy Ln
Buyer Ranch Rd
Estero River
Ave
Corkscrew Rd
Three Oaks Pkwy
Oakwilde Blvd
Copperleaf Golf Club
Autumn Breeze Dr
Knollview Blvd
Shadowood Country Club
Hollow Pine Dr
Shady Knoll Dr
Coconut Point Mall
Via Garibaldi Cir
Bay Ln

Figure 33-504(b)

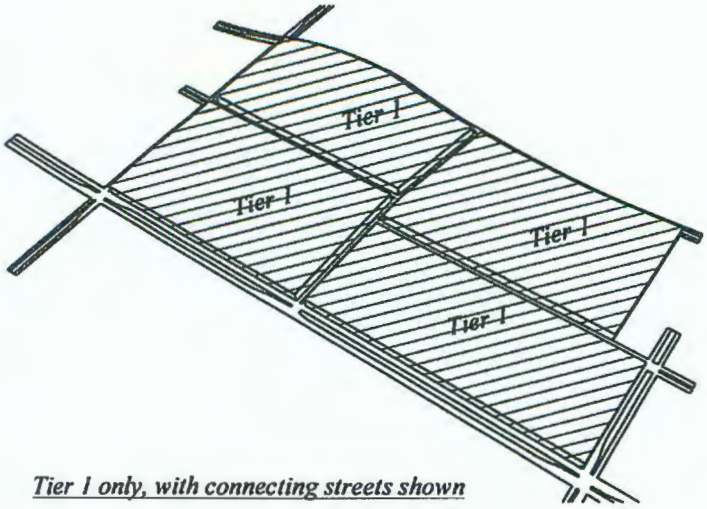

Tier 1 only, with connecting streets shown

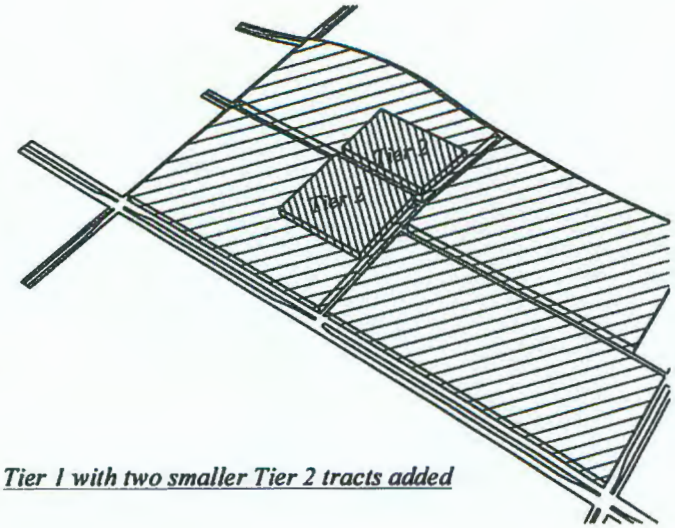

Tier 1 with two smaller Tier 2 tracts added

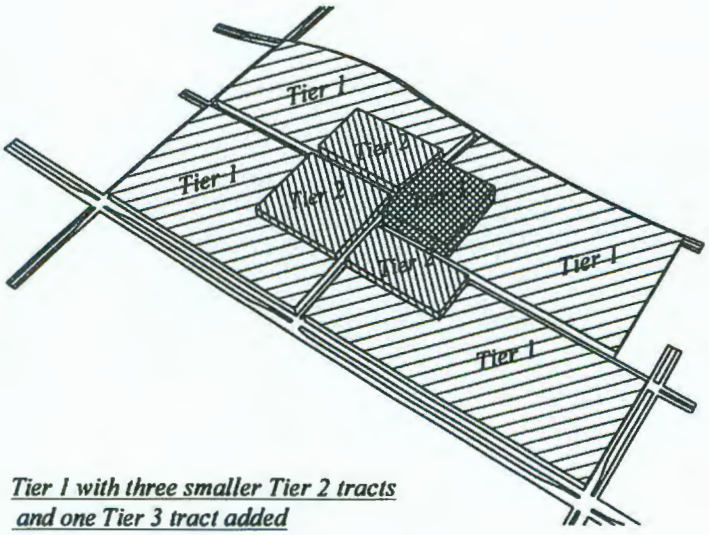

Tier 1 with three smaller Tier 2 tracts and one Tier 3 tract added

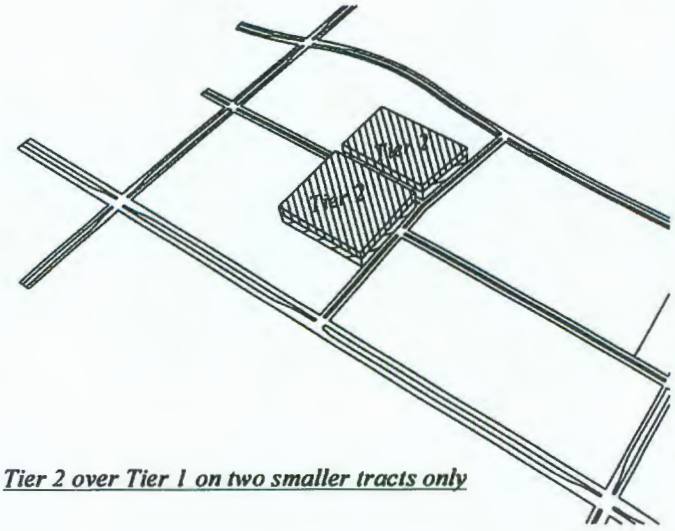

Tier 2 over Tier 1 on two smaller tracts only

Figure 33-506(c): Cross Section of Connecting Streets.

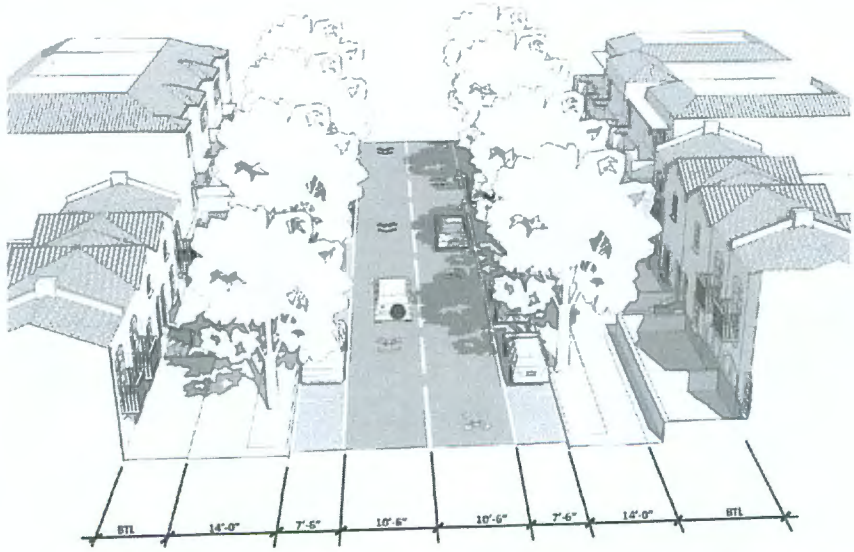

(typical sidewalk and planting strip
for blocks designated as Tier 1 or 2)

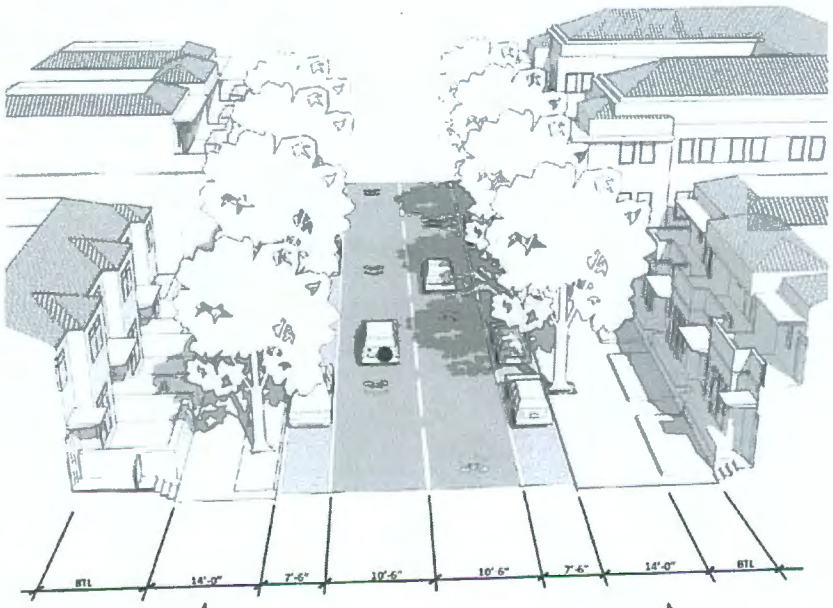

Typical sidewalk and planting strip
for blocks designated as Tier 2

Typical sidewalk and street tree wells
for blocks designated as Tier 2 or 3

Figure 33-508(b) Connecting Streets.

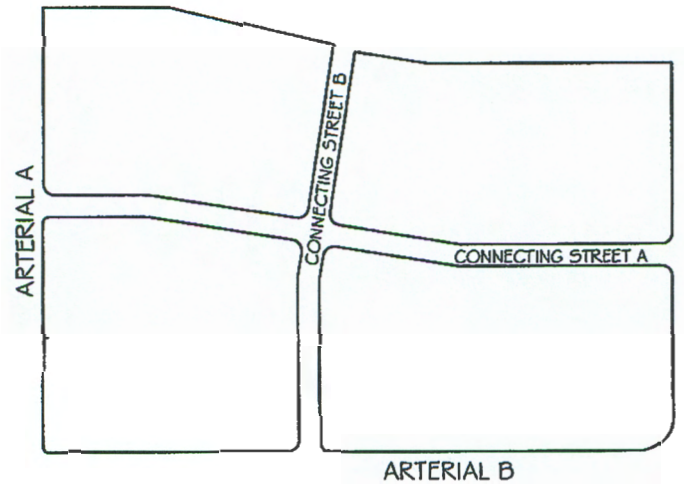

Table 33-519(b)
Use Regulations Table
EPD Planned Development District

	Special Notes or Regulations	EPD
Accessory uses and structures	Note (1), 34-1171 et seq., 34-2441 et seq., 34-1863, 34-2141 et seq., 34-3106	P
Accessory Apartment	Note (2), (21), & (28), 34-1177	P
Administrative Offices	Note (1)	P
Agricultural Services: Office/Base Operations		P
Agricultural Uses and Agricultural Accessory Uses		P
Aircraft Food Services and Catering		-
Aircraft Landing Facilities, Private	34-1231 et seq.	-
Airport Operations Facilities		-
Amateur Radio Antennas and Satellite Earth Stations	34-1175	
Amusement Park		-
Animals:		
Clinic or Kennel	34-1321 et seq.	P
Control Center (Including Humane Society)		P
Keeping and Breeding of Class I or Class II Animals (df)	34-1291 et seq.	-
Assisted Living Facility	Note (35) & (47) 34-1491 et seq., 34-1411	P
ATM (Automatic Teller Machine)		P
Auto Parts Store	34-1353	P
Automobile Repair and Service (34-622(c)(2)), all groups	34-1351, 34-1353 Note (41)	P
Automobile Service Station	Note (41), 34-1351, 34-1353	P
Bait and Tackle Shop	Note (49)	P
Banks and Financial Establishments (34-622(c)(3)):		
Group I		P
Group II		P
Bar or Cocktail Lounge	34-1261 et seq.	P
Bed and Breakfast (df)	Note (28), 34-1494	P
Boarding House	Note (28)	-
Boats:		
Boat Parts Store		P
Boat Ramps and Dockage (not Marinas)		P
Boat Rental		P
Boat Repair and Service	34-1352, 34-3001 ET SEQ.	P
Boat Sales		-
Boat Storage, Dry		-

Boatyard	Note (5)	-
Broadcast Studio, Commercial Radio and Television	34-1441 et seq.	P
Building Material Sales (34-622(c)(4))	34-3001 et seq.	-
Business Services (34-622(c)(5)):		
Group I		P
Group II	Note (12), 34-1352	P
Bus Station/Depot	34-1381 et seq.	P
Camping Cabins	Note (28)	P
Caretaker's Residence	Note (34)	P
Car Wash	34-1353	P
Cemetery, Columbarium, Mausoleum		-
Cleaning and Maintenance Services (34-622(c)(7))		P
Clothing Stores, General (34-622(c)(8))		P
Clubs:		
Country		P
Commercial		P
Fraternal, Membership Organization	34-2111	P
Private	34-2111	P
Cold Storage, Pre-cooling, Warehouse and Processing Plant		-
Commercial Fishery		-
Commercial Use of Beachfront Seaward of the Coastal Construction Control Line	Note (7), 34-3151	-
Communication Facility, Wireless	34-1441 et seq. Note (22)	
Community Gardens	34-1716	AA
Community Residential Home	Note (35)	P
Compact Community	Note (48)	
Computer and Data Processing Services		P
Consumption on Premises	34-1261 et seq., Note (49)	P
Continuing Care Facilities	Note (28), 34-1414	P
Contractors and Builders (34-622(c)(9)), all groups	34-1352, 34-3001 et seq.	P
Convenience Food and Beverage Store	34-1353	P(27)
Correctional Facility	Note (28)	-
Cultural Facilities (34-622(c)(10))		P
Day Care Center, Child, Adult	Note (28)	P
Department Store		P
Dormitory	Note (28)	-
Drive-Through Facility for any permitted use		P
Drugstore, Pharmacy		P
Dwelling Unit:		
Live-Work	34-1773	P

Single-Family	Note (29)	P
Duplex	Note (29) & (43)	P
Two-Family Attached	Note (28) & (43)	P
Townhouse, Multiple-Family Building	Note (28)	P
Mobile Home	Note (29)	P
Zero Lot Line	Note (28)	P
Entrance Gates and Gatehouse	34-1741 et seq.	P
Emergency Operations Center		P
EMS, Fire or Sheriff's Station		P
Essential Services	Note (1), 34-1611 et seq., 34-1741 et seq.	P
Essential Service Facilities (34-622(c)(13)):		
Group I	Note (1), 34-1611 et seq., 341741 et seq., 34-2141 et seq.	P
Group II	Note (1) & (45), 34-1611 et seq., 34-1741 et seq., 34-2141 et seq.	P
Group III	Note (1), 341611 et seq., 34-1741 et seq., 34-2141 et seq.	P
Excavation:		
Mining	Note (44), 12-101 et seq.	-
Water Retention	34-1651	P
Oil or Gas	34-1651	-
Excess Spoil Removal	Note (42), 10-329	P
Factory Outlets (Point of Manufacture Only)		P
Farm Equipment, Sales, Storage, Rental or Service		-
Farm Labor Housing	Note (33), 34-1891 et seq.	-
Feed or Fertilizer, Mixing and Sales		-
Fences, Walls	Note (1), 34-1741 et seq.	P
Fish House, Wholesale		-
Fishing Piers		P
Flea Market:		
Open		-
Indoor		-
Food and Beverage Service, Limited	Note (1)	P
Food Stores (34-622(c)(16)):		
Group I	Note (49)	P
Group II	Note (49)	P
Forestry Tower		P
Fraternity House	Note (28)	-
Freight and Cargo Handling Establishments (34-622(c)(17))		-
Funeral Home and Mortuary (with or without a crematory)		P
Gasoline Dispensing System, Special		P
Gift and Souvenir Shop	Note (49)	P
Golf Course		P
Golf Driving Range		P
Hardware Store		P

Hatcheries, Poultry		-
Health Care Facilities (34-622(c)(20)):		
Group I	Note (28) & (47)	P
Group II	Note (28) & (47)	P
Group III		P
Group IV	Note (28) & (47)	P
Heliport or Helistop		P
Hobby, Toy, and Game Shops (34-622(c)(21))		P
Home Care Facility	Note (1) & (28)	P
Home Occupation	Note (1) & (31), 34-1771 et seq.	P
Hospice	Note (28)	P
Hotel/Motel	34-1801 et seq., Note (36)	P
Household and Office Furnishings (34-622(c)(22)), all groups		P
Housing Units for Employees Only	Note (33)	P
Impound yard	34-1831 et seq., 34-2443	-
Insurance Companies (34-622(c)(23))		P
Laundry or Dry Cleaning (34-622(c)(24)):		
Group I		P
Group II		P
Lawn and Garden Supply Stores	34-2081	P
Library	Note (28)	P
Maintenance Facility (Government)		P
Manufacturing of:		
Apparel Products (34-622(c)(1))	Note (5)	P
Boats	Note (5)	-
Chemical and Allied Products (34-622(c)(6))		-
Group I	Note (5)	-
Group II	Note (5)	-
Electrical Machinery and Equipment (34-622(c)(11))	Note (5)	-
Fabricated Metal Products (34-622(c)(14)):		-
Group I	Note (5)	-
Group II	Note (5)	-
Group III	Note (5)	-
Food and Kindred Products (34-622(c)(15)):		
Group I	Note (5)	-
Group II	Note (5)	-
Group III	Note (5)	-
Furniture and Fixtures (34-622(c)(18))	Note (5)	-
Leather Products (34-622(c)(25)):		

		Group I	Note (5)	-
		Group II	Note (5)	-
	Lumber and Wood Products (34-622(c)(26)):			
		Groups I, III, IV, V and VI	Note (5)	-
		Group II	Note (5)	-
	Machinery (34-622(c)(27)), all groups		Note (5)	-
	Measuring, Analyzing and Controlling Instruments (34-622(c)(28))		Note (5)	-
	Novelties, Jewelry, Toys and Signs (34-622(c)(29)), all groups		Note (5)	-
	Paper and Allied Products (34-622(c)(31))			
		Group I	Note (5)	-
		Group II	Note (5)	-
		Group III	Note (5)	-
	Petroleum (34-622(c)(34))		Note (5)	-
	Primary Metal Industries (34-622(c)(35))		Note (5)	-
	Rubber and Plastic Products (34-622(c)(44)):			
		Group I	Note (5)	-
		Group II	Note (5)	-
	Stone, Clay, Glass and Concrete Products (34-622(c)(48)):			-
		Group I	Note (5)	-
		Group II	Note (5)	-
		Group III	Note (5)	-
		Group IV	Note (5)	-
	Textile Mill Products (34-622(c)(50)), all groups		Note (5)	-
	Tobacco Products (34-622(c)(51))		Note (5)	-
	Transportation Equipment (34-622(c)(52)):			
		Group I	Note (5)	-
		Groups II, III and IV	Note (5)	-
Marina			34-1862	-
Medical Office				-
Mobile Home Dealers			34-1352	-
Models:				
	Display Center		34-1951 et seq.	P
	Model Home		34-1951 et seq.	AA
	Model Unit		34-1951 et seq.	AA
Motion Picture Production Studio				P
Multislip Docking Facility				P
Nightclubs			34-1261 et seq.	P
Nonstore Retailers (34-622(c)(30))< all groups				P
Parcel and Express Services				P

Package Store	34-1261 et seq.	P
Paint, Glass and Wallpaper		P
Parks (34-622(c)(32)):		
Group I		P
Group II		P
Park Trailers	Note (28)	-
Parking Lot:		
Accessory		P
Commercial		P
Garage, Public		P
Park-and-Ride	34-1388	P
Temporary	34-2022	P
Personal Services (34-622(c)(33)):		
Group I	34-3021	P
Group II		P
Group III		P
Group IV		P
Pet Services		P
Pet Shop		P
Pharmacy		P
Photofinishing Laboratory	Note (5)	P
Place of Worship	Note (28), 34-2051 et seq.	P
Plant Nursery	34-2081	P
Post Office		P
Printing and Publishing (34-622(c)(36))	Note (5)	P
Prison	Note (28)	-
Processing or Packaging of Agricultural or Fish Products	Note (5)	-
Processing and Warehousing		-
Racetracks (34-622(c)(37)):		
Group I		-
Group II		-
Real Estate Sales Office	Note (23), 34-1951 et seq., 34-3021	P
Recreation Facilities:		
Commercial (34-622(c)(38)) Groups I, III		P
Commercial (34-622(c)(38)) Group IV		P
Group V		P
Personal	Note (1)	P
Private-on-Site	Note (1)	P
Private-off-Site	Note (1)	P
Recreational Vehicles	Note (28)	-
Recycling Facility		-
Religious Facilities	Note (28), 34-2051 et seq.	P
Rental or Leasing Establishment (34-622(c)(39)):		
Group I	34-1352. 34-3001 et seq., Note (49)	P
Group II	34-1201 et seq., 34-1352, 34-3001 et seq.	P
Group III	34-1352, 34-3001 et seq.	P
Group IV	34-1201 et seq., 34-1352, 34-3001 et seq.	P
Repair Shops (34-622(c)(40)):		

	Group I		P
	Groups II, III, IV		P
	Group V		P
Research and Development Laboratories (34-622(c)(41)):			
	Group I		P
	Group II		P
	Group III		P
	Group IV		P
Residential Accessory Uses (34-622(c)(42))		Note (1) & (31), 34-1171 et seq.	P
Resource Recovery Facilities:			-
Recovery Facilities to Produce Energy Recovery Facilities, Other		34-3001 ET SEQ.	-
Restaurant, Fast Food		34-1353	P
Restaurants (34-622(c)(43)):			
	Groups I and III		P
	Group II		P
	Group IV		P
Retail and Wholesale Sales, when clearly incidental and subordinate to a permitted principal use on the same premises			P
Rooming House		Note (28)	-
Salvage and Disposal of Materials, including auto junkyards, refuse disposal and processing plants, incinerators, landfills and similar uses			-
Sanitary Landfill		Note (5)	-
Schools:			
	Commercial (34-622(c)(45))	34-2381	P
	Non Commercial	Note (28), 34-2381	P
Self-Service Fuel Pumps		Note (24)	P
Shredding and Composting of Vegetative Matter		34-1831 et seq.	-
Signs in Accordance with Chapter 30 and 33		Note (1)	P
Social Services (34-622(c)(46)):			
	Group I		P
	Group II		P
	Group III	Note (28) & (47)	-
	Group IV	Note (28) & (47)	P
Specialty Retail Shops (34-622(c)(47)):			
	Group I		P
	Group II		P
	Group III		P
	Group IV		P
Stable:			
	Boarding	34-1291 et seq.	P
	Commercial	34-1291 et seq.	P
	Private	34-1291 et seq.	P

Storage:		
Indoor Only	Note (1), 34-3001 et seq.	P
Storage, Open	Note (5), 34-3001 et seq. 34-1352	P
Large-Scale Storage of noxious or hazardous materials (flammable, toxic, explosive, corrosive, etc.), including liquid petroleum, fractions and distillates thereof, and fuel gases	Note (5), 34-3001 et seq.	-
Studios (34-622(c)(49))		P
Tactical Training	34-2471	P
Temporary Uses	Note (1), 34-3041 et seq.	P
Tents, Transient Parks Only	Note (28)	P
Theater, Indoor or Outdoor (drive-in)	Note (32), 34-2471 et seq.	P
Timeshare Units	Note (28), 34-1494, 34-2020(a)	P
Transportation Services (34-622(c)(53)):		
Group I		P
Group II		P
Group III		P
Group IV		P
Truck Stop, Trucking Terminal		-
Used Merchandise Stores (34-622(c)(54)):		
Group I		P
Groups II, III and IV		P
Variety Store		P
Vehicle and Equipment Dealers (34-622(c)(55)):		
Groups I, II and III	34-1352	P
Group IV	34-1352	-
Group V	34-1352	-
Warehouse:		
High Cube		-
Mini-Warehouse		-
Private		-
Public		-
Cold Storage Only		-
Wholesale Establishments (34-622(c)(56)):		
Groups I, III and IV		-
Group II		-
Wrecking Yard:		-
Auto		-
Other		-

Notes:

(1) If use or structure is customarily accessory to an approved permitted use it does not need to be shown on the master concept plan.

(2) Permitted only when accessory to a lawfully permitted single-family dwelling unit.

(3) If not shown on the master concept plan, but included in the approved list of enumerated uses, this use may be approved administratively, at the Director's discretion, or as a planned development amendment after approval of the master concept plan.
(4) Subject to limitations for commercial uses set forth in section 34-937.
(5) If the use or activity does not conform to the criteria set-forth in section 34-938, then it is subject to the setback requirements set forth in sections 34-935(b)(4) and 34-2441 et seq.
(6) Limited to non-transient parks only.
(7) Uses anticipated include boat rentals (inflatables, sailboats, jet skis, windsurfers and the like) food stands, rental of cabanas and beach furniture, outdoor amusements including balloonist, seaplane rides, ski tows and similar activities, fishing and sightseeing piers and towers.
(8) Permitted as an accessory use when designed and intended primarily for use by people staying at the recreational vehicle development.
(9) Permitted only when accessory to an airport or other transportation facility, hotel or motel, or an office complex of 50,000 or more square feet.
(10) Permitted only in conjunction with at least 50,000 square feet or more of commercial or industrial uses.
(11) Not permitted within 500 feet of nearest residence.
(12) Automobile auctions, on-site or internet, are permitted only when all vehicles are stored inside. Projects with outdoor storage will be considered vehicle and equipment dealers, group I, and must comply with section 34-1352.
(13) Reserved.
(14) Park-trailers permitted in non-transient parks only.
(15) Limited to recreational vehicles, trailers, boats, and other vehicles and goods belonging to park residents.
(16) Limited to airplane fuels or other approved fuel storage terminals.
(17) Limited to recreational vehicles only.
(18) Reserved.
(19) Only when clearly subordinate to a cemetery located on the same premises.
(20) Recreational vehicle sites in mobile home planned developments (MHPD) must be designated on the approved master concept plan. All recreational vehicles approved as part of a MHPD are subject to the regulations in sections 34-762 through 34-766 and 34-1179.
(21) In RPDs, MHPDs and residential areas MPDs, a special exception is required.
(22) Wireless communication facilities must be listed on the approved schedule of uses for the planned development; however, approval of a specific facility must be in accordance with section 34-1441, et seq.
(23) Real estate sales offices in residential areas are limited to sales of lots, homes or units within the development, except as may be permitted in section 34-1951 et seq. The location of, and approval for, the real estate sales office will be valid for a period of time not exceeding five years from the date the certificate of occupancy for the sales office is issued. The Director may grant one two-year extension at the same location.
(24) Two pumps are permissible as an accessory use to businesses to provide fuel for their own fleet of vehicles and equipment. Additional pumps require approval of a special exception.
(25) Reserved.
(26) In the MPD district, use is limited to industrial areas only.
(27) Limited to eight self-service fuel pumps (df) unless a greater number is specifically approved as part of the planned development and depicted on the master concept plan. An existing business with more than eight lawfully permitted pumps as of January 31, 1998 will not be considered non-conforming. Existing pumps may be modernized, replaced, or relocated on the same premises but additional new pumps will not be permitted.
(28) Not permitted in Airport Noise Zone B.
(29) Not permitted in Airport Noise Zone B. See section 34-1004 for exceptions.
(30) Reserved.

(31)Not permitted in Airport Noise Zone B unless accessory to a lawful mobile home or single-family residence. See section 34-1004.

(32)Indoor theater only in Airport Noise Zone B.

(33)Not permitted in Airport Noise Zone B.

(34)Not permitted in Airport Noise Zone unless required to support a noise compatible use and constructed in compliance with limitations for dwelling unit type set forth in section 34-1006(b)(2) as applicable.

(35)Not permitted in Airport Noise Zone B unless pre-empted by state law.

(36)Sound attenuating insulation should be considered for hotels and motels in Airport Noises Zone B.

(37)In the Industrial Development land use category, offices and office complexes are only permitted when specifically related to adjoining industrial use(s). Prior to issuance of any local development order, the developer must record covenants and restrictions for the property that limit any office uses to those that are specifically related to adjoining industrial uses consistent with Policy 1.1.7 of the Lee County Comprehensive Plan.

(38)Reserved.

(39)Wireless communication facilities required by the Federal Aviation Administration and Florida Department of Transportation may be administratively approved, if it is a necessary safety component related to the physical aviation activity.

(40)Reserved.

(41)Limited to four pumps, unless a greater number is approved as part of a planned development.

(42)In an existing planned development, the Director has the discretion to require removal of excess spoil to be reviewed through the public hearing process.

(43) And- See sections 34-3107 and 34-3108.

(44)The rights applicable to mining excavations approved prior to September 1, 2008, are set forth in section12-121.

(45)All new or expanded essential services group II uses must be approved as a planned development.

(46)Permitted only as part of an AOPD approval for Page Field General Aviation Airport. Use must be included in Lee Plan Table 5(b) and be located within the non-aviation development area as depicted on Lee Plan Map 3G.

(47)Not permitted in Coastal High Hazard areas unless in compliance with section 2-485(b)(5)a.

(48)Land uses in the Compact PD district are governed by chapter 32.

(49)See section 34-3152.

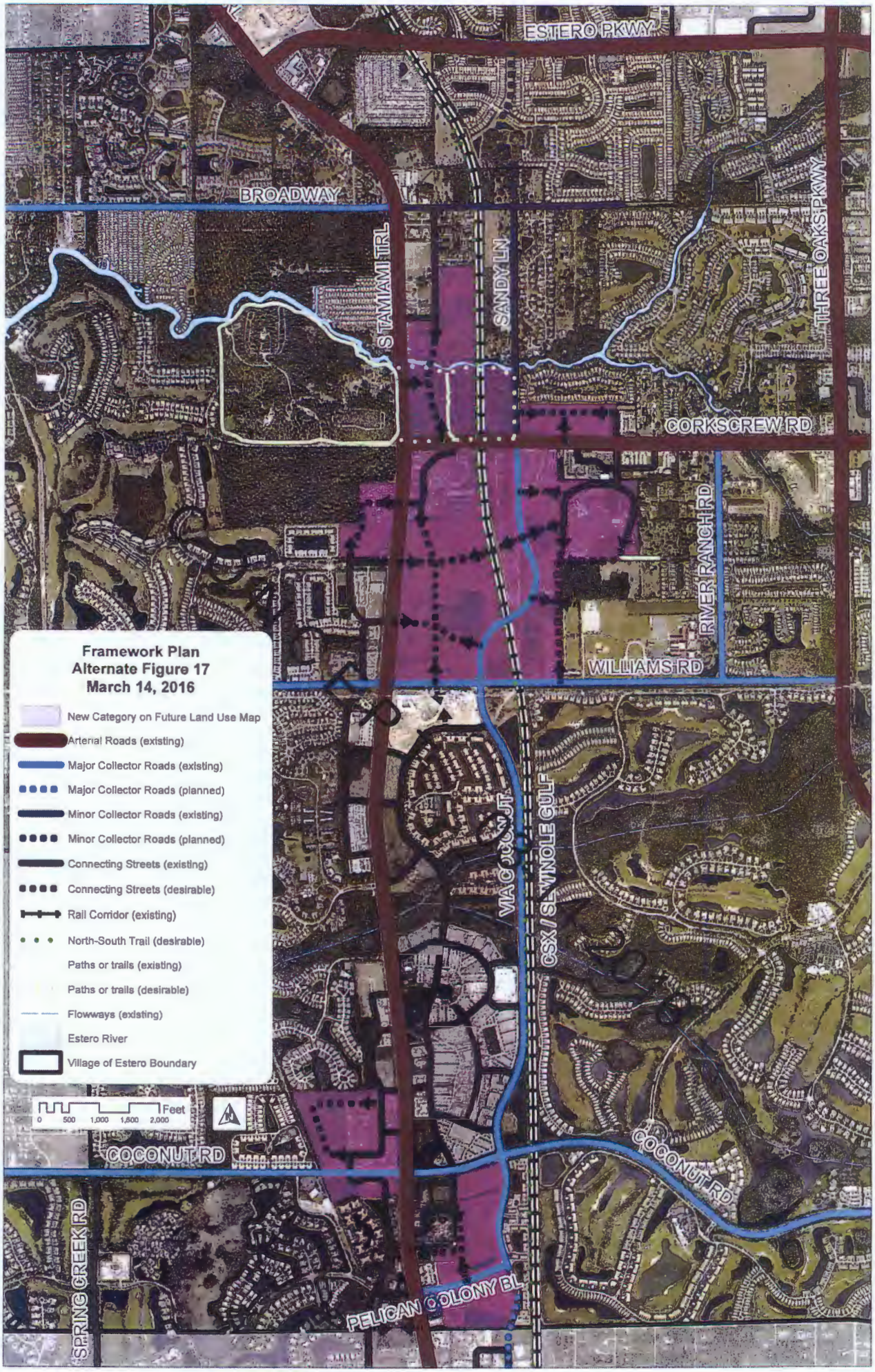
Framework Plan
Alternate Figure 17
March 14, 2016
New Category on Future Land Use Map
Arterial Roads (existing)
Major Collector Roads (existing)
Major Collector Roads (planned)
Minor Collector Roads (existing)
Minor Collector Roads (planned)
Connecting Streets (existing)
Connecting Streets (desirable)
Rail Corridor (existing)
North-South Trail (desirable)
Paths or trails (existing)
Paths or trails (desirable)
Flowways (existing)
Estero River
Village of Estero Boundary
0 500 1,000 1,500 2,000 Feet
ESTERO PKWY
BROADWAY
S TAMIAMI TRL
SANDY LN
THREE OAKS PKWY
CORKSCREW RD
RIVER RANCH RD
WILLIAMS RD
VIA COCONUT
CSX / SEMINOLE GULF
COCONUT RD
COCONUT RD
SPRING CREEK RD
PELICAN COLONY BL